Basic Pad *ZP Series*

RoHS

ø2, ø4, ø6, ø8, ø10, ø13, ø16, ø20, ø25, ø32, ø40, ø50

Flat Type, Flat Type with Ribs, Bellows Type, Thin Flat Type, Thin Flat Type with Ribs, Deep Type

12 sizes, 6 types of pad forms, and a wide range of adapter variations

Pad form	Application
Flat type	For workpieces with flat and undeformed surfaces
Flat type with ribs	For workpieces which are easily deformed Workpieces can be removed easily thanks to the ribs.
Bellows type	For use where there is no space for a buffer or for workpieces with inclined surfaces
Thin flat type	For soft workpieces such as thin sheets or vinyl Wrinkling or deformation during adsorption can be reduced.
Thin flat type with ribs	For soft workpieces such as thin sheets or vinyl Workpieces can be removed easily thanks to the ribs.
Deep type	For workpieces with curved surfaces or for spherical workpieces

Mounting bracket	Application
Ball joint	For workpieces with inclined or curved surfaces
With adapter	The adapter can be selected according to the installation conditions.
With buffer	For workpieces of varying heights The buffer can reduce the impact to the workpiece during adsorption.

CONTENTS

Basic Pad *ZP Series*

Variations ..... p. 27
Specifications ..... p. 29

Flat Type
· How to Order ..... p. 31
· Dimensions/Models ..... p. 32
Flat Type with Ribs
· How to Order ..... p. 50
· Dimensions/Models ..... p. 51
Flat, Ball Joint Type
· How to Order ..... p. 61
· Dimensions/Models ..... p. 62
Bellows Type
· How to Order ..... p. 67
· Dimensions/Models ..... p. 68
Thin Flat Type
· How to Order ..... p. 86
· Dimensions/Models ..... p. 87
Thin Flat Type with Ribs
· How to Order ..... p. 95
· Dimensions/Models ..... p. 96
Deep Type
· How to Order ..... p. 104
· Dimensions/Models ..... p. 105

Construction ..... p. 115
(Flat type/Flat type with ribs/Bellows type/Thin flat type/Thin flat type with ribs/Deep type)
Construction ..... p. 119
(Flat, Ball joint type)
Mounting Bracket Assembly ..... p. 121
(Flat type/Flat type with ribs/Bellows type/Thin flat type/Thin flat type with ribs/Deep type)
Mounting Bracket Assembly ..... p. 127
(Flat, Ball joint type)

Specific Product Precautions ..... p. 165

Variations

Vacuum inlet direction		Vacuum inlet direction	Flat type	Flat type with ribs	Bellows type	Thin flat type	Thin flat type with ribs	Deep type
	Single unit	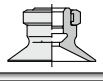	p. 32	p. 51	p. 68	p. 87	p. 96	p. 105
Vertical	ZPT With adapter	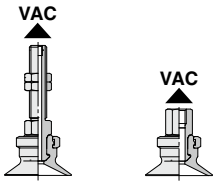	p. 33 p. 34	p. 51 p. 52	p. 69 p. 70	p. 87	p. 96	p. 105 p. 106
Lateral	ZPR With adapter	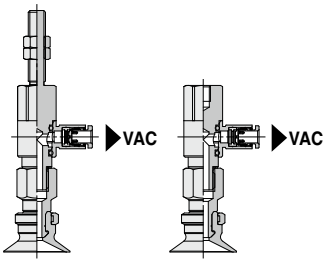	p. 35 p. 37	p. 53 p. 54	p. 71 p. 73	p. 88 p. 89	p. 97 p. 98	p. 107 p. 108
Lateral	ZPY With adapter	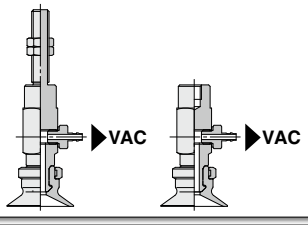	p. 39 p. 41	p. 55 p. 56	p. 75 p. 77	p. 90 p. 91	p. 99 p. 100	p. 109 p. 110
Vertical	ZPT With buffer	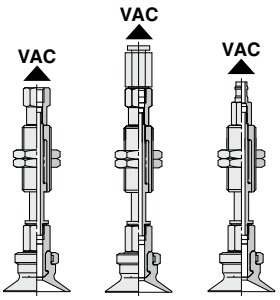	p. 43	p. 57	p. 79	p. 92	p. 101	p. 111
Lateral	ZPR With buffer	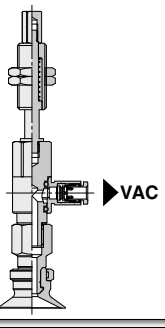	p. 46	p. 59	p. 82	p. 93	p. 102	p. 113
Lateral	ZPY With buffer	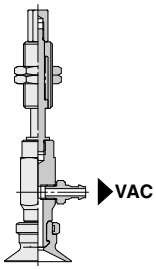	p. 48	p. 60	p. 84	p. 94	p. 103	p. 114

Ball Joint Type

Vacuum inlet direction		Vacuum inlet direction	Flat type
Vacuum inlet direction	Single unit		p. 62
Vertical	ZPT With adapter	VAC, VAC	p. 62 p. 63
Lateral	ZPR With adapter	VAC	p. 64
Vertical	ZPT With buffer	VAC, VAC	p. 65
Lateral	ZPR With buffer	VAC	p. 66

Basic Pad *ZP Series*
Specifications

Pad Material

Material	NBR (Nitrile rubber)	Silicone rubber*1*2	Urethane rubber	FKM (Fluoro rubber)	Conductive NBR (Nitrile rubber)	Conductive silicone rubber
Color of rubber	Black	White	Brown	Black		
Rubber hardness (Shore A: ±5°)	50	40	50 to 60	60	50 to 70	50 to 60

*1 Uses a material compliant with a dissolution test of the FDA (U.S. Food and Drug Administration) regulation 21CFR§177.2600 for "Rubber articles intended for repeated use."
*2 Uses a material compliant with the standards for "Rubber apparatus (excluding baby drinking apparatus) and containers/packaging" (D3) (Partial revision: Japanese Ministry of Health, Labour, and Welfare Notification No. 595, 2012) in Section 3 "Apparatus and Containers/Packaging" of the Japan Food Sanitation Act, Article 18 "Specifications and Standards for Food and Food Additives, etc." (Japanese Ministry of Health and Welfare Notification No. 370, 1959)

Adapter Specifications

Vertical

Vacuum Inlet Direction Vertical T Type/ZPT

Connection		Male thread							Female thread			
Pad diameter		ø2 to ø8	ø10 to ø16		ø20 to ø32		ø40, ø50		ø2 to ø8*1	ø10 to ø16	ø20 to ø32	ø40, ø50
Connection thread		M5 x 0.8 M6 x 1	M5 x 0.8 M6 x 1	M5 x 0.8 M6 x 1 G1/8	M5 x 0.8 M6 x 1 M8 x 1	M5 x 0.8 M6 x 1 G1/8	M6 x 1 M8 x 1	M6 x 1 G1/4	M4 x 0.7 M5 x 0.8	M5 x 0.8 M6 x 1 G1/8 1/8 (Rc, NPT, NPTF)	M5 x 0.8 M6 x 1 M8 x 1.25 G1/8 1/8 (Rc, NPT, NPTF)	M6 x 1 M8 x 1.25 G1/4 1/8 (Rc, NPT, NPTF)
Vacuum inlet	Female thread	Use the connection thread.	M3 x 0.5	Use the connection thread.	M3 x 0.5 M5 x 0.8	Use the connection thread.	M3 x 0.5 M5 x 0.8	Use the connection thread.	Use the connection thread.			

*1 Refer to ø2 to ø8 for the thin flat type and thin flat type with ribs.

Lateral

Vacuum Inlet Direction Lateral R Type/ZPR

Connection		Male thread			Female thread			
Pad diameter		ø2 to ø16	ø20 to ø32	ø40, ø50	ø2 to ø8*1	ø10 to ø16	ø20 to ø32	ø40, ø50
Connection thread		M5 x 0.8 M6 x 1	M6 x 1 M8 x 1		M4 x 0.7 M5 x 0.8	M5 x 0.8 M6 x 1	M5 x 0.8 M6 x 1 M8 x 1.25	M6 x 1 M8 x 1.25
Vacuum inlet	One-touch fitting	ø4, ø6	ø4, ø6, ø8	ø6, ø8	ø4, ø6		ø4, ø6, ø8	ø6, ø8

*1 Refer to ø2 to ø8 for the thin flat type and thin flat type with ribs.

Vacuum Inlet Direction Lateral Y Type/ZPY

Connection		Male thread			Female thread			
Pad diameter		ø2 to ø16	ø20 to ø32	ø40, ø50	ø2 to ø8*1	ø10 to ø16	ø20 to ø32	ø40, ø50
Connection thread		M5 x 0.8 M6 x 1	M6 x 1 M8 x 1		M4 x 0.7 M5 x 0.8	M5 x 0.8 M6 x 1	M5 x 0.8 M6 x 1 M8 x 1.25	M6 x 1 M8 x 1.25
Vacuum inlet	Barb fitting*2	ø4, ø6		ø6	ø4, ø6			ø6

*1 Refer to ø2 to ø8 for the thin flat type and thin flat type with ribs.
*2 Applicable tubing: Nylon tubing, Soft tubing

Buffer Specifications

Vertical
Lateral

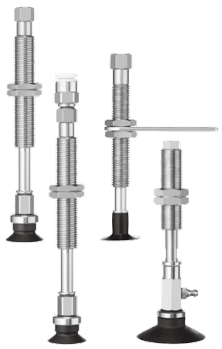

Pad diameter		ø2 to ø8*1	ø10 to ø32	ø40, ø50
Non-rotating specification		J: Rotating, K: Non-rotating		
Stroke [mm]		6, 10, 15, 25	10, 20, 30, 40, 50	10, 20, 30, 50
Connection thread		M8 x 1	M10 x 1	M14 x 1
Spring reactive force [N]	At 0 stroke	0.8	1.0	2.0
	At full stroke	1.2	3.0	5.0

*1 Refer to ø2 to ø8 for the thin flat type and thin flat type with ribs.

Specifications

Adapter Specifications (Ball Joint Type)

Ball joint rotating angle	30°

Vertical

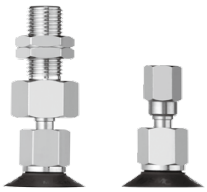

Vacuum Inlet Direction Vertical T Type/ZPT□F

Connection	Male thread			Female thread		
Pad diameter	ø10 to ø16	ø20 to ø32	ø40, ø50	ø10 to ø16	ø20 to ø32	ø40, ø50
Connection thread	M8 x 1	M10 x 1	M14 x 1	M5 x 0.8	M5 x 0.8 M8 x 1.25 1/8 (Rc, NPT, NPTF)	M8 x 1.25 1/8 (Rc, NPT, NPTF)
Vacuum inlet	M5 x 0.8			Use the connection thread.		

Lateral

Vacuum Inlet Direction Lateral R Type/ZPR□F

Connection		Female thread		
Pad diameter		ø10 to ø16	ø20 to ø32	ø40, ø50
Connection thread		M5 x 0.8	M5 x 0.8 M8 x 1.25	M5 x 0.8 M8 x 1.25
Vacuum inlet	One-touch fitting	ø4, ø6	ø6, ø8	ø6, ø8

Buffer Specifications (Ball Joint Type)

Vertical Lateral

Pad diameter		ø10 to ø16	ø20 to ø50
Non-rotating specification		J: Rotating, K: Non-rotating	
Stroke [mm]		10, 20, 30, 40, 50	10, 20, 30, 50
Connection thread		M10 x 1	M14 x 1
Spring reactive force [N]	At 0 stroke	1.0	2.0
	At full stroke	3.0	5.0

Basic Pad
Flat Type
ZP Series

How to Order

		Dimensions/ Models	Construction	Mounting Bracket Assembly
Pad unit	ZP ❶ 02 U N ❹ – ❾	p. 32	p. 115 p. 117	From p. 121
With adapter	ZP ❶ T ❷ 02 ❸ U N ❹ – A5 ❺ – ❾	From p. 33	p. 115 p. 117	From p. 121
With buffer	ZP T 02 U N J 6 – B3 – A8	From p. 43	p. 116 p. 118	From p. 124

∗ Pad unit's sales unit: 10 pcs. (Pad diameter: ø20 mm or less)

❶ ❷ ❸ ❹ ❺ ❻ ❼ ❽ ❾

● Flat type

❶ Adapter (Lock ring) material

Nil	Brass
S∗1	Stainless steel (Stainless steel 304)

∗1 Only applicable to the pad unit (with lock ring) and the pad with adapter (Vacuum inlet direction: Vertical (Option "T"))

❷ Vacuum inlet direction

Nil	Pad unit
T	Vertical
R	Lateral (With One-touch fitting)
Y	Lateral (With barb fitting)

❸ Pad diameter

02	ø2	**16**	ø16
04	ø4	**20**	ø20
06	ø6	**25**	ø25
08	ø8	**32**	ø32
10	ø10	**40**	ø40
13	ø13	**50**	ø50

❹ Material

N	NBR
S	Silicone rubber∗1 ∗2
U	Urethane rubber
F	FKM
GN	Conductive NBR
GS	Conductive silicone rubber

∗1 Uses a material compliant with a dissolution test of the FDA (U.S. Food and Drug Administration) regulation 21CFR§177.2600 for "Rubber articles intended for repeated use."

∗2 Uses a material compliant with the standards for "Rubber apparatus (excluding baby drinking apparatus) and containers/packaging" (D3) (Partial revision: Japanese Ministry of Health, Labour, and Welfare Notification No. 595, 2012) in Section 3 "Apparatus and Containers/Packaging" of the Japan Food Sanitation Act, Article 18 "Specifications and Standards for Food and Food Additives, etc." (Japanese Ministry of Health and Welfare Notification No. 370, 1959)

❺ Buffer specification

J	Rotating
K	Non-rotating
JN∗1	Rotating (Without buffer plate)
KN∗1	Non-rotating (Without buffer plate)

∗1 Only for pad diameters ø2 to ø8

❻ Buffer stroke

Stroke [mm]	Pad diameter [mm]											
	ø2	ø4	ø6	ø8	ø10	ø13	ø16	ø20	ø25	ø32	ø40	ø50
6	●	●	●	●	—	—	—	—	—	—	—	—
10	●	●	●	●	●	●	●	●	●	●	●	●
15	●	●	●	●	—	—	—	—	—	—	—	—
20	—	—	—	—	●	●	●	●	●	●	●	●
25	●	●	●	●	—	—	—	—	—	—	—	—
30	—	—	—	—	●	●	●	●	●	●	●	●
40	—	—	—	—	●	●	●	●	●	●	—	—
50	—	—	—	—	●	●	●	●	●	●	●	●

With adapter

❼ Vacuum inlet

○: ZP□T/Vertical ●: ZPR/Lateral (With One-touch fitting) △: ZPY/Lateral (With barb fitting)

Type	Symbol	Size	Pad diameter [mm]			
			ø2 to ø8	ø10 to ø16	ø20 to ø32	ø40, ø50
Male thread	**A5**	M5 x 0.8	○∗1	—	—	—
	AS5		—	○∗1	○∗1	—
	A6	M6 x 1	○∗1	—	—	—
	AS6		—	○∗1	○∗1	○∗1
	AG01	G1/8	—	○∗1	○∗1	—
	AG02	G1/4	—	—	—	○∗1
Female thread	**Nil**	M3 x 0.5	—	○ (❻ Connection thread: A5/A6)	○ (❻ Connection thread: A6)	○ (❻ Connection thread: A6)
		M5 x 0.8	—	—	○ (❻ Connection thread: A8)	○ (❻ Connection thread: A8)
	B4	M4 x 0.7	○∗1	—	—	—
	B5	M5 x 0.8	○∗1	○∗1	○∗1	—
	B6	M6 x 1	—	○∗1	○∗1	○∗1
	B8	M8 x 1.25	—	—	○∗1	○∗1
	BG01	G1/8	—	○∗1	○∗1	—
	BG02	G1/4	—	—	—	○∗1
	B01	Rc1/8	—	○∗1	○∗1	○∗1
	N01∗4	NPT1/8	—	○∗1	○∗1	○∗1
	T01∗4	NPTF1/8	—	○∗1	○∗1	○∗1
One-touch fitting	**04**	ø4	●	●	●	—
	06	ø6	●	●	●	●
	08	ø8	—	—	●	●
Barb fitting	**N4**	For ø4 nylon tubing∗2	△	△	△	—
	N6	For ø6 nylon tubing∗2	△	△	△	△
	U4	For ø4 soft tubing∗3	△	△	△	—
	U6	For ø6 soft tubing∗3	△	△	△	△

∗1 Use the connection thread. ∗2 Nylon tube piping ∗3 Soft nylon/Polyurethane tube piping ∗4 Not compatible with stainless steel materials

❽ Connection thread

○: ZP□T/Vertical ●: ZPR/Lateral (With One-touch fitting) △: ZPY/Lateral (With barb fitting)

Type	Symbol	Size	Pad diameter [mm]			
			ø2 to ø8	ø10 to ø16	ø20 to ø32	ø40, ø50
Male thread∗1	**A5**	M5 x 0.8	●△	○∗2●△	—	—
	A6	M6 x 1	●△	○∗2●△	○∗2●△	○∗2●△
	A8	M8 x 1	—	—	○∗2●△	○∗2●△
Female thread	**B4**	M4 x 0.7	●△	—	—	—
	B5	M5 x 0.8	●△	●△	●△	—
	B6	M6 x 1	—	●△	●△	●△
	B8	M8 x 1.25	—	—	●△	●△

∗1 The mounting nut is shipped together with the product (unassembled). ∗2 ○: ZP□T/Vertical comes with a vacuum inlet (female thread).

With buffer

❼ Vacuum inlet

○: ZPT/Vertical ●: ZPR/Lateral (With One-touch fitting) △: ZPY/Lateral (With barb fitting)

Type	Symbol	Size	Pad diameter [mm]			
			ø2 to ø8	ø10 to ø16	ø20 to ø32	ø40, ø50
Female thread	**B3**	M3 x 0.5	○	—	—	—
	B5	M5 x 0.8	○	○	○	○
	B01	Rc1/8	—	—	—	○
	N01	NPT1/8	—	—	—	○
	T01	NPTF1/8	—	—	—	○
One-touch fitting	**04**	ø4	○●	○●	○●	—
	06	ø6	○●	○●	○●	○●
	08	ø8	—	—	●	○●
Barb fitting	**N4**	For ø4 nylon tubing∗1	○△	△	△	—
	N6	For ø6 nylon tubing∗1	△	○△	○△	○△
	U4	For ø4 soft tubing∗2	○△	△	△	—
	U6	For ø6 soft tubing∗2	△	○△	○△	○△

∗1 Nylon tube piping ∗2 Soft nylon/Polyurethane tube piping

❽ Connection thread

○: ZPT/Vertical ●: ZPR/Lateral (With One-touch fitting) △: ZPY/Lateral (With barb fitting)

Type	Symbol	Size	Pad diameter [mm]			
			ø2 to ø8	ø10 to ø16	ø20 to ø32	ø40, ø50
Male thread∗1	**A8**	M8 x 1	○●△	—	—	—
	A10	M10 x 1	—	○●△	○●△	—
	A14	M14 x 1	—	—	—	○●△

∗1 The mounting nut, buffer plate, and ○: ZPT/Vertical buffer are shipped together with the product (unassembled).

❾ Lock ring

Symbol	Pad diameter [mm]	
	ø2 to ø8	ø10 to ø50
Nil	None∗1	With lock ring
X19		Without lock ring

∗1 The lock ring cannot be used for pad diameters ø2 to ø8.

Lock ring unit

Part no.	Pad diameter [mm]
ZP□L1	ø10 to ø16
ZP□L2	ø20 to ø32
ZP□L3	ø40, ø50

□: Nil/Brass S/Stainless steel

∗ The pad unit lock ring is shipped together with the product (unassembled).

Dimensions/Models

Single unit ø2 to ø8

ZP 02 U N
❶ ❷

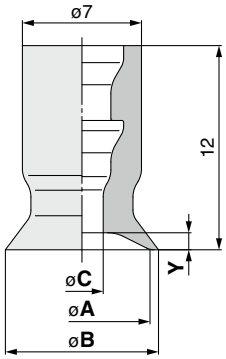

Construction	p. 115
Mounting Bracket Assembly	From p. 121

Model ❶ Pad dia.	Form	❷ *1 Material	A	B	C	Y
ZP 02	U	N S U F GN GS	2	2.6	1.2	0.5
04			4	4.8	1.6	0.8
06			6	7	2.5	
08			8	9		1

*1 N: NBR, S: Silicone rubber, U: Urethane rubber, F: FKM, GN: Conductive NBR, GS: Conductive silicone rubber

Single unit ø10 to ø50

ZP □ 10 U N
❶ ❷ ❸

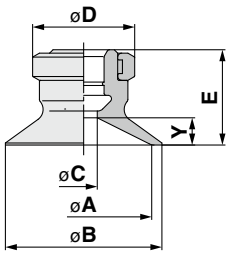

Construction	p. 117
Mounting Bracket Assembly	From p. 121

❶ Lock ring material

Nil	Brass
S	Stainless steel (Stainless steel 304)

Model ❶ Lock ring material	❷ Pad dia.	Form	❸ *1 Material	A	B	C	D	E	Y
ZP Nil S	10	U	N S U F GN GS	10	12	4	13	12	3
	13			13	15				
	16			16	18			12.5	3.5
	20			20	23		15	14	4
	25			25	28				
	32			32	35			14.5	4.5
	40			40	43	7	18	18.5	6.5
	50			50	53			19.5	7.5

*1 N: NBR, S: Silicone rubber, U: Urethane rubber, F: FKM, GN: Conductive NBR, GS: Conductive silicone rubber

Dimensions/Models

With adapter ø2 to ø8

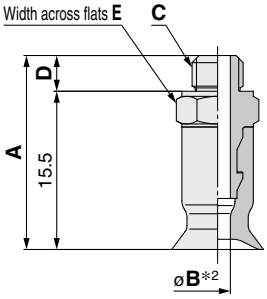

Construction	p. 115
Adapter Assembly	p. 121

ZP □ T 02 U N - A5
❶ ❷ ❸ ❹

❶ Adapter material

Nil	Brass
S	Stainless steel (Stainless steel 304)

❹ Vacuum inlet (Male thread)

A5	M5 x 0.8
A6	M6 x 1

Model							A	B*2	C	D	E
	❶ Adapter material	Vacuum inlet direction	❷ Pad dia.	Form	❸ Material*1	❹ Vacuum inlet					
ZP	Nil S	T	02	U	N S U F GN GS	A5	19	1.2	M5 x 0.8	3.5	7
			04					1.6			
			06 08					2.5			
			02			A6	20	1.2	M6 x 1	4.5	8
			04					1.6			
			06 08					2.5			

*1 N: NBR, S: Silicone rubber, U: Urethane rubber, F: FKM, GN: Conductive NBR, GS: Conductive silicone rubber
*2 Indicates the minimum hole size of the adapter or vacuum pad

With adapter ø10 to ø50

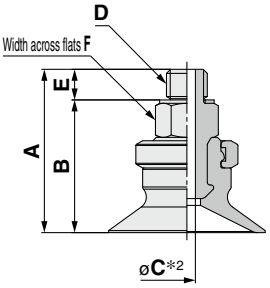

Construction	p. 117
Adapter Assembly	p. 121

ZP □ T 10 U N - AS5
❶ ❷ ❸ ❹

❶ Adapter (Lock ring) material

Nil	Brass
S	Stainless steel (Stainless steel 304)

❹ Vacuum inlet (Male thread)

AS5	M5 x 0.8
AS6	M6 x 1
AG01	G1/8
AG02	G1/4

Model							A	B	C*2	D	E	F
	❶ Adapter material	Vacuum inlet direction	❷ Pad dia.	Form	❸ Material*1	❹ Vacuum inlet						
ZP	Nil S	T	10 13	U	N S U F GN GS	AS5	21	17.5	2.5	M5 x 0.8	3.5	8
			16				21.5	18				
			20 25				23	19.5				
			32				23.5	20				
			10 13			AS6	22	17.5	2.5	M6 x 1	4.5	8
			16				22.5	18				
			20 25				24	19.5				
			32				24.5	20				
			40				29.5	25				12
			50				30.5	26				
			10 13			AG01	30	24.5	2.5	G1/8	5.5	17
			16				30.5	25				
			20 25				32	26.5	4			
			32				32.5	27				
			40			AG02	39	32.5	7	G1/4	6.5	21
			50				40	33.5				

*1 N: NBR, S: Silicone rubber, U: Urethane rubber, F: FKM, GN: Conductive NBR, GS: Conductive silicone rubber
*2 Indicates the minimum hole size of the adapter or vacuum pad

Dimensions/Models

With adapter ø10 to ø50

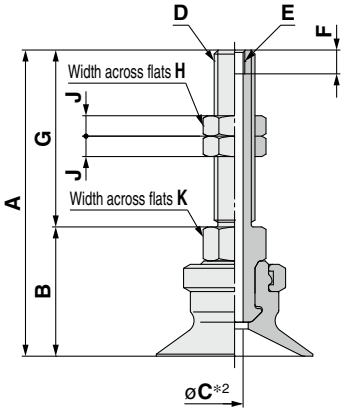

Construction p. 117
Adapter Assembly p. 121

ZP □ T 10 U N - A5
❶ ❷ ❸ ❹

❶ Adapter (Lock ring) material

Nil	Brass
S	Stainless steel (Stainless steel 304)

❹ Connection thread (Male thread)

A5	M5 x 0.8 (M3 x 0.5 With female thread)
A6	M6 x 1 (M3 x 0.5 With female thread)
A8	M8 x 1 (M5 x 0.8 With female thread)

Model							A	B	C*2	D	E	F	G	H	J	K
	❶ Adapter material	Vacuum inlet direction	❷ Pad dia.	Form	❸ Material *1	❹ Connection thread										
ZP	Nil S	T	10 13	U	N S U F GN GS	A5	38	17	2.5	M5 x 0.8	M3 x 0.5	3.5	21	8	4	8
			16				38.5	17.5								
			10 13			A6	43	17	2.5	M6 x 1	M3 x 0.5	3.5	26	8	4	8
			16				43.5	17.5								
			20 25				45	19								
			32				45.5	19.5								
			40				50.5	24.5								12
			50				51.5	25.5								
			20 25			A8	40	24	4	M8 x 1	M5 x 0.8	5	16	12	4	12
			32				40.5	24.5	4.2							
			40													
			50				41.5	25.5								

*1 N: NBR, S: Silicone rubber, U: Urethane rubber, F: FKM, GN: Conductive NBR, GS: Conductive silicone rubber
*2 Indicates the minimum hole size of the adapter or vacuum pad

Dimensions/Models

With adapter ø2 to ø8

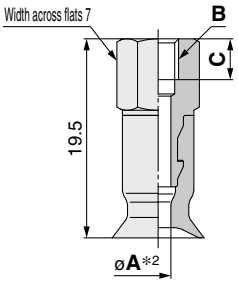

Construction p. 115
Adapter Assembly p. 121

ZP □ T 02 U N - B4
❶ ❷ ❸ ❹

❶ Adapter material

Nil	Brass
S	Stainless steel (Stainless steel 304)

❹ Vacuum inlet (Female thread)

B4	M4 x 0.7
B5	M5 x 0.8

Model							A*2	B	C
	❶ Adapter material	Vacuum inlet direction	❷ Pad dia.	Form	❸ Material*1	❹ Vacuum inlet			
ZP	Nil S	T	02 04 06 08	U	N S U F GN GS	B4	1.2 1.6 2.5	M4 x 0.7	4
			02 04 06 08			B5	1.2 1.6 2.5	M5 x 0.8	5

*1 N: NBR, S: Silicone rubber, U: Urethane rubber, F: FKM, GN: Conductive NBR, GS: Conductive silicone rubber
*2 Indicates the minimum hole size of the adapter or vacuum pad

With adapter ø10 to ø50

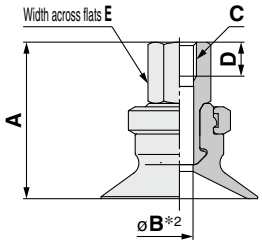

Construction p. 117
Adapter Assembly p. 121

ZP □ T 10 U N - B5
❶ ❷ ❸ ❹

❶ Adapter (Lock ring) material

Nil	Brass
S	Stainless steel (Stainless steel 304)

❹ Vacuum inlet (Female thread)

B5	M5 x 0.8	BG02	G1/4
B6	M6 x 1	B01	Rc1/8
B8	M8 x 1.25	N01*1	NPT1/8
BG01	G1/8	T01*1	NPTF1/8

*1 Not compatible with stainless steel materials

Model							A	B*2	C	D	E
	❶ Adapter material	Vacuum inlet direction	❷ Pad dia.	Form	❸ Material*1	❹ Vacuum inlet					
ZP	Nil S	T	10 13 16 20 25 32	U	N S U F GN GS	B5	21 21.5 23 23.5	2.5 4	M5 x 0.8	5	8
			10 13 16 20 25 32 40 50			B6	21 21.5 23 23.5 32 33	2.5 4 4.9	M6 x 1	6	8 12
			20 25 32 40 50			B8	29 29.5 32 33	3.5 6.6	M8 x 1.25	8	12
			10 13 16 20 25 32			BG01	27 27.5 29 29.5	2.5 4	G1/8	7.4	14
			40 50			BG02	38 39	7	G1/4	11	17
			10 13 16 20 25 32 40 50			B01 N01*3 T01*3	27 27.5 29 29.5 32 33	2.5 3.5 7	Rc1/8 NPT1/8 NPTF1/8	—	12

*1 N: NBR, S: Silicone rubber, U: Urethane rubber, F: FKM, GN: Conductive NBR, GS: Conductive silicone rubber
*2 Indicates the minimum hole size of the adapter or vacuum pad
*3 Not compatible with stainless steel materials

Dimensions/Models

With adapter/One-touch fitting ø2 to ø8

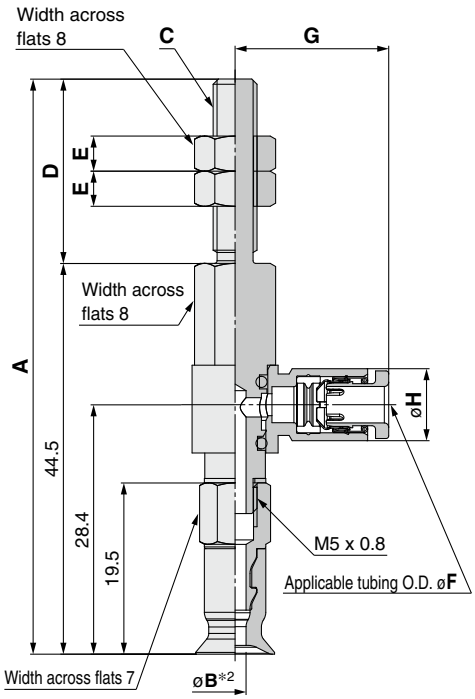

Construction p. 115
Adapter Assembly p. 122

ZPR 02 U N - 04 - A5

❶ ❷ ❸ ❹

❸ Vacuum inlet (One-touch fitting)

04	ø4
06	ø6

❹ Connection thread (Male thread)

A5	M5 x 0.8
A6	M6 x 1

Model							A	B*2	C	D	E
	Vacuum inlet direction	❶ Pad dia.	Form	❷ Material*1	❸ Vacuum inlet	❹ Connection thread					
ZP	R	02	U	N S U F GN GS	04 06	A5	65.5	1.2	M5 x 0.8	21	4
		04						1.6			
		06 08						2.5			
		02				A6	70.5	1.2	M6 x 1	26	4
		04						1.6			
		06 08						2.5			

Dimensions Per Vacuum Inlet

Model							F	G	H	Fitting part min. hole size
	Vacuum inlet direction	❶ Pad dia.	Form	❷ Material*1	❸ Vacuum inlet	❹ Connection thread				
ZP	R	02 04 06 08	U	N S U F GN GS	04	A5 A6	4	17.5	8.2	ø2.5
					06		6	18.3	10.4	ø4

*1 N: NBR, S: Silicone rubber, U: Urethane rubber, F: FKM, GN: Conductive NBR, GS: Conductive silicone rubber
*2 Indicates the minimum hole size of the adapter or vacuum pad

Dimensions/Models

With adapter/One-touch fitting ø10 to ø50

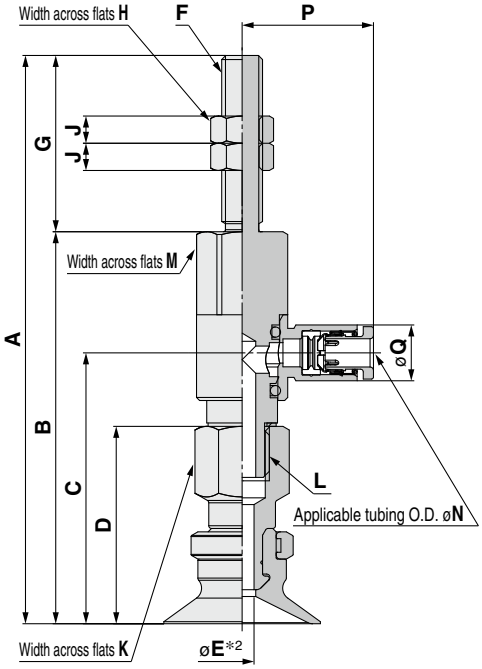

Construction p. 117
Adapter Assembly p. 122

ZPR 10 U N - 04 - A5

❶ ❷ ❸ ❹

❸ **Vacuum inlet (One-touch fitting)**

04	ø4
06	ø6
08	ø8

❹ **Connection thread (Male thread)**

A5	M5 x 0.8
A6	M6 x 1
A8	M8 x 1

Model							A	B	C	D	*2 E	F	G	H	J	K	L
	Vacuum inlet direction	❶ Pad dia.	Form	❷ Material *1	❸ Vacuum inlet	❹ Connection thread											
ZP	R	10 13	U	N S U F GN GS	04 06 08	A5	67	46	29.9	21	2.5	M5 x 0.8	21	8	4	8	M5 x 0.8
		16					67.5	46.5	30.4	21.5							
		10 13				A6	72	46	29.9	21	2.5	M6 x 1	26	8	4	8	M5 x 0.8
		16					72.5	46.5	30.4	21.5							
		20 25					83.5	57.6	39.8	29	3.5		25.9			12	M8 x 1.25
		32					84	58.1	40.3	29.5							
		40					86.5	60.6	42.8	32	4						
		50					87.5	61.6	43.8	33							
		20 25				A8	73.5	57.6	39.8	29	3.5	M8 x 1	15.9	12	4	12	M8 x 1.25
		32					74	58.1	40.3	29.5							
		40					76.5	60.6	42.8	32	4						
		50					77.5	61.6	43.8	33							

Dimensions Per Vacuum Inlet

Model							M	N	P	Q	Fitting part min. hole size
	Vacuum inlet direction	❶ Pad dia.	Form	❷ Material *1	❸ Vacuum inlet	❹ Connection thread					
ZP	R	10 13 16	U	N S U F GN GS	04	A5 A6	8	4	17.5	8.2	ø2.5
					06			6	18.3	10.4	ø4
		20 25 32			04	A6 A8	12	4	19.3	8.2	ø3
					06			6	20.5	10.4	ø4.5
					08		16	8	23.5	13.2	ø6
		40 50			06		12	6	20.5	10.4	ø4.5
					08		16	8	23.5	13.2	ø6

*1 N: NBR, S: Silicone rubber, U: Urethane rubber, F: FKM, GN: Conductive NBR, GS: Conductive silicone rubber

*2 Indicates the minimum hole size of the adapter or vacuum pad

Dimensions/Models

With adapter/One-touch fitting ø2 to ø8

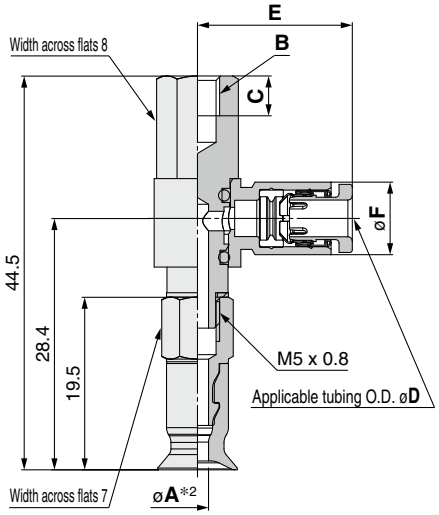

Construction p. 115
Adapter Assembly p. 122

ZPR 02 U N - 04 - B4

❶ ❷ ❸ ❹

❸ **Vacuum inlet (One-touch fitting)**

04	ø4
06	ø6

❹ **Connection thread (Female thread)**

B4	M4 x 0.7
B5	M5 x 0.8

Model							A*2	B	C
	Vacuum inlet direction	❶ Pad dia.	Form	❷ Material*1	❸ Vacuum inlet	❹ Connection thread			
ZP	R	02	U	N S U F GN GS	04 06	B4	1.2	M4 x 0.7	4.5
		04					1.6		
		06 08					2.5		
		02				B5	1.2	M5 x 0.8	5.5
		04					1.6		
		06 08					2.5		

Dimensions Per Vacuum Inlet

Model							D	E	F	Fitting part min. hole size
	Vacuum inlet direction	❶ Pad dia.	Form	❷ Material*1	❸ Vacuum inlet	❹ Connection thread				
ZP	R	02 04 06 08	U	N S U F GN GS	04	B4 B5	4	17.5	8.2	ø2.5
					06		6	18.3	10.4	ø4

*1 N: NBR, S: Silicone rubber, U: Urethane rubber, F: FKM, GN: Conductive NBR, GS: Conductive silicone rubber

*2 Indicates the minimum hole size of the adapter or vacuum pad

Dimensions/Models

With adapter/One-touch fitting ø10 to ø50

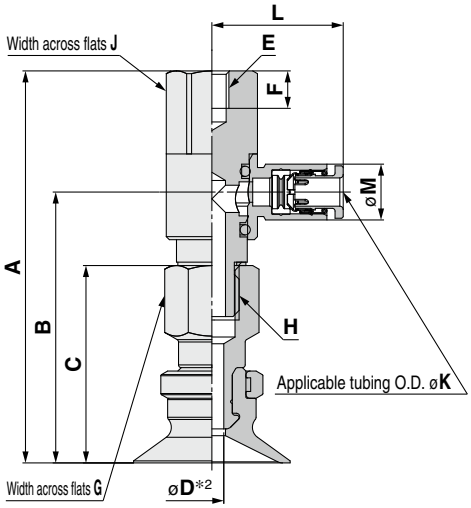

Construction p. 117
Adapter Assembly p. 122

ZPR 10 U N - 04 - B5
❶ ❷ ❸ ❹

❸ Vacuum inlet (One-touch fitting)

04	ø4
06	ø6
08	ø8

❹ Connection thread (Female thread)

B5	M5 x 0.8
B6	M6 x 1
B8	M8 x 1.25

Model							A	B	C	D*2	E	F	G	H
	Vacuum inlet direction	❶ Pad dia.	Form	❷ Material*1	❸ Vacuum inlet	❹ Connection thread								
ZP	R	10 13	U	N S U F GN GS	04 06 08	B5	46	29.9	21	2.5	M5 x 0.8	5.5	8	M5 x 0.8
		16					46.5	30.4	21.5					
		20 25					57.6	39.8	29	3.5			12	M8 x 1.25
		32					58.1	40.3	29.5					
		10 13				B6	46	29.9	21	2.5	M6 x 1	6.5	8	M5 x 0.8
		16					46.5	30.4	21.5					
		20 25					57.6	39.8	29	3.5			12	M8 x 1.25
		32					58.1	40.3	29.5					
		40					60.6	42.8	32	4				
		50					61.6	43.8	33					
		20 25				B8	57.6	39.8	29	3.5	M8 x 1.25	8.5	12	M8 x 1.25
		32					58.1	40.3	29.5					
		40					60.6	42.8	32	4				
		50					61.6	43.8	33					

Dimensions Per Vacuum Inlet

Model							J	K	L	M	Fitting part min. hole size
	Vacuum inlet direction	❶ Pad dia.	Form	❷ Material*1	❸ Vacuum inlet	❹ Connection thread					
ZP	R	10 13 16	U	N S U F GN GS	04	B5 B6	8	4	17.5	8.2	ø2.5
					06			6	18.3	10.4	ø4
		20 25 32			04	B5 B6 B8	12	4	19.3	8.2	ø3
					06			6	20.5	10.4	ø4.5
					08		16	8	23.5	13.2	ø6
		40 50			06	B6 B8	12	6	20.5	10.4	ø4.5
					08		16	8	23.5	13.2	ø6

*1 N: NBR, S: Silicone rubber, U: Urethane rubber, F: FKM, GN: Conductive NBR, GS: Conductive silicone rubber
*2 Indicates the minimum hole size of the adapter or vacuum pad

Dimensions/Models

With adapter/barb fitting ø2 to ø8

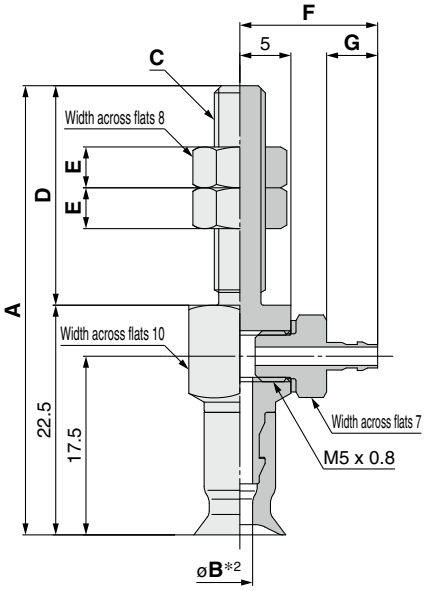

Construction	p. 115
Adapter Assembly	p. 123

ZPY 02 U N - N4 - A5

❶ ❷ ❸ ❹

❸ Vacuum inlet (Barb fitting)

N4	For ø4 nylon tubing	M-5AN-4
N6	For ø6 nylon tubing	M-5AN-6
U4	For ø4 soft tubing	M-5AU-4
U6	For ø6 soft tubing	M-5AU-6

❹ Connection thread (Male thread)

A5	M5 x 0.8
A6	M6 x 1

Model							A	B*2	C	D	E
	Vacuum inlet direction	❶ Pad dia.	Form	❷ Material*1	❸ Vacuum inlet	❹ Connection thread					
ZP	Y	02	U	N S U F GN GS	N4 N6 U4 U6	A5	44	1.2	M5 x 0.8	21.5	4
		04						1.6			
		06 08						2.5			
		02				A6	49.5	1.2	M6 x 1	27	4
		04						1.6			
		06 08						2.5			

Dimensions Per Vacuum Inlet

Model							F	G	Fitting part min. hole size
	Vacuum inlet direction	❶ Pad dia.	Form	❷ Material*1	❸ Vacuum inlet	❹ Connection thread			
ZP	Y	02 04 06 08	U	N S U F GN GS	N4 U4	A5 A6	13.5	5	ø1.8
					N6 U6		15.5	7	ø2.5

*1 N: NBR, S: Silicone rubber, U: Urethane rubber, F: FKM, GN: Conductive NBR, GS: Conductive silicone rubber

*2 Indicates the minimum hole size of the adapter or vacuum pad

Dimensions/Models

With adapter/barb fitting ø10 to ø50

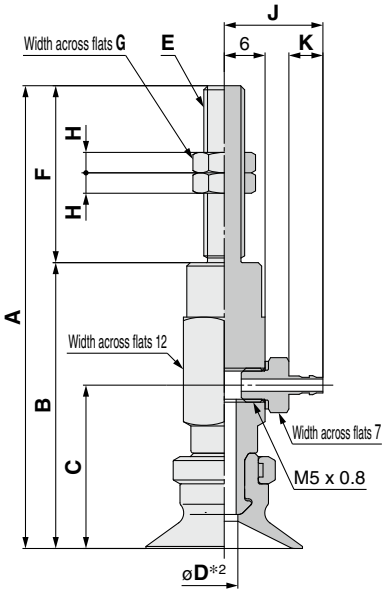

Construction p. 117
Adapter Assembly p. 123

ZPY 10 U N - N4 - A5

❶ ❷ ❸ ❹

❹ Connection thread (Male thread)

A5	M5 x 0.8
A6	M6 x 1
A8	M8 x 1

❸ Vacuum inlet (Barb fitting)

N4	For ø4 nylon tubing	M-5AN-4
N6	For ø6 nylon tubing	M-5AN-6
U4	For ø4 soft tubing	M-5AU-4
U6	For ø6 soft tubing	M-5AU-6

Model							A	B	C	D*2	E	F	G	H
	Vacuum inlet direction	❶ Pad dia.	Form	❷ Material *1	❸ Vacuum inlet	❹ Connection thread								
ZP	Y	10 13	U	N S U F GN GS	N4 N6 U4 U6	A5	59	38	22	2.5	M5 x 0.8	21	8	4
		16					59.5	38.5	22.5					
		10 13				A6	64	38	22	2.5	M6 x 1	26	8	4
		16					64.5	38.5	22.5					
		20 25					68	42	24	3.5				
		32					68.5	42.5	24.5					
		40					72.5	46.5	28.5	6				
		50					73.5	47.5	29.5					
		20 25				A8	58	42	24	3.5	M8 x 1	16	12	4
		32					58.5	42.5	24.5					
		40					62.5	46.5	28.5	6				
		50					63.5	47.5	29.5					

Dimensions Per Vacuum Inlet

Model							J	K	Fitting part min. hole size
	Vacuum inlet direction	❶ Pad dia.	Form	❷ Material *1	❸ Vacuum inlet	❹ Connection thread			
ZP	Y	10 13 16 20 25 32	U	N S U F GN GS	N4 U4	A5 A6	14.5	5	ø1.8
					N6 U6		16.5	7	ø2.5
		40 50			N6 U6	A6 A8	16.5	7	ø2.5

*1 N: NBR, S: Silicone rubber, U: Urethane rubber, F: FKM, GN: Conductive NBR, GS: Conductive silicone rubber
*2 Indicates the minimum hole size of the adapter or vacuum pad

Dimensions/Models

With adapter/barb fitting ø2 to ø8

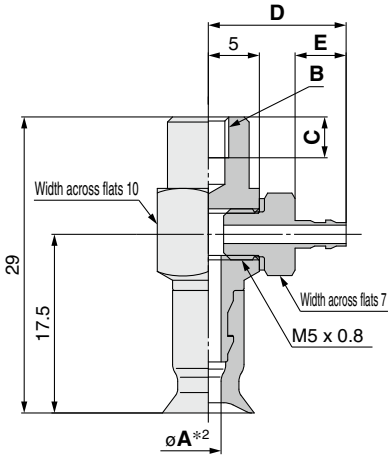

Construction p. 115
Adapter Assembly p. 123

ZPY 02 U N - N4 - B4

❶ ❷ ❸ ❹

❹ **Connection thread (Female thread)**

B4	M4 x 0.7
B5	M5 x 0.8

❸ **Vacuum inlet (Barb fitting)**

N4	For ø4 nylon tubing	M-5AN-4
N6	For ø6 nylon tubing	M-5AN-6
U4	For ø4 soft tubing	M-5AU-4
U6	For ø6 soft tubing	M-5AU-6

Model							A*2	B	C
	Vacuum inlet direction	❶ Pad dia.	Form	❷ Material *1	❸ Vacuum inlet	❹ Connection thread			
ZP	Y	02	U	N S U F GN GS	N4 N6 U4 U6	B4	1.2	M4 x 0.7	4
		04					1.6		
		06 08					2.5		
		02				B5	1.2	M5 x 0.8	5
		04					1.6		
		06 08					2.5		

Dimensions Per Vacuum Inlet

Model							D	E	Fitting part min. hole size
	Vacuum inlet direction	❶ Pad dia.	Form	❷ Material *1	❸ Vacuum inlet	❹ Connection thread			
ZP	Y	02 04 06 08	U	N S U F GN GS	N4 U4	B4 B5	13.5	5	ø1.8
					N6 U6		15.5	7	ø2.5

*1 N: NBR, S: Silicone rubber, U: Urethane rubber, F: FKM, GN: Conductive NBR, GS: Conductive silicone rubber
*2 Indicates the minimum hole size of the adapter or vacuum pad

Dimensions/Models

With adapter/barb fitting ø10 to ø50

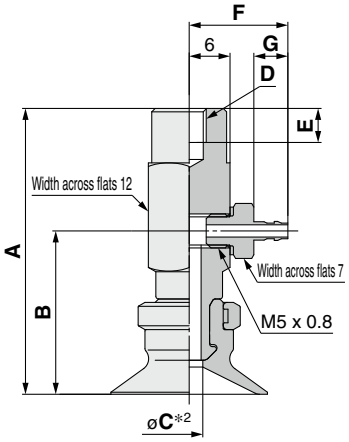

Construction p. 117
Adapter Assembly p. 123

ZPY 10 U N - N4 - B5

❶ ❷ ❸ ❹

Vacuum inlet ❸ (Barb fitting)

N4	For ø4 nylon tubing	M-5AN-4
N6	For ø6 nylon tubing	M-5AN-6
U4	For ø4 soft tubing	M-5AU-4
U6	For ø6 soft tubing	M-5AU-6

❹ Connection thread (Female thread)

B5	M5 x 0.8
B6	M6 x 1
B8	M8 x 1.25

Model							A	B	C*2	D	E
	Vacuum inlet direction	❶ Pad dia.	Form	❷ Material*1	❸ Vacuum inlet	❹ Connection thread					
ZP	Y	10 13	U	N S U F GN GS	N4 N6 U4 U6	B5	38	22	2.5	M5 x 0.8	5
		16					38.5	22.5			
		20 25					42	24	3.5		
		32					42.5	24.5			
		10 13				B6	38	22	2.5	M6 x 1	6
		16					38.5	22.5			
		20 25					42	24	3.5		
		32					42.5	24.5			
		40					46.5	28.5	6		
		50					47.5	29.5			
		20 25				B8	42	24	3.5	M8 x 1.25	8
		32					42.5	24.5			
		40					46.5	28.5	6		
		50					47.5	29.5			

Dimensions Per Vacuum Inlet

Model							F	G	Fitting part min. hole size
	Vacuum inlet direction	❶ Pad dia.	Form	❷ Material*1	❸ Vacuum inlet	❹ Connection thread			
ZP	Y	10 13 16	U	N S U F GN GS	N4 U4	B4 B5	14.5	5	ø1.8
					N6 U6		16.5	7	ø2.5
		20 25 32			N4 U4	B5 B6 B8	14.5	5	ø1.8
					N6 U6		16.5	7	ø2.5
		40 50			N6 U6	B6 B8	16.5	7	ø2.5

*1 N: NBR, S: Silicone rubber, U: Urethane rubber, F: FKM, GN: Conductive NBR, GS: Conductive silicone rubber
*2 Indicates the minimum hole size of the adapter or vacuum pad

Dimensions/Models

With buffer ø2 to ø8

The drawings show the type with a buffer plate.

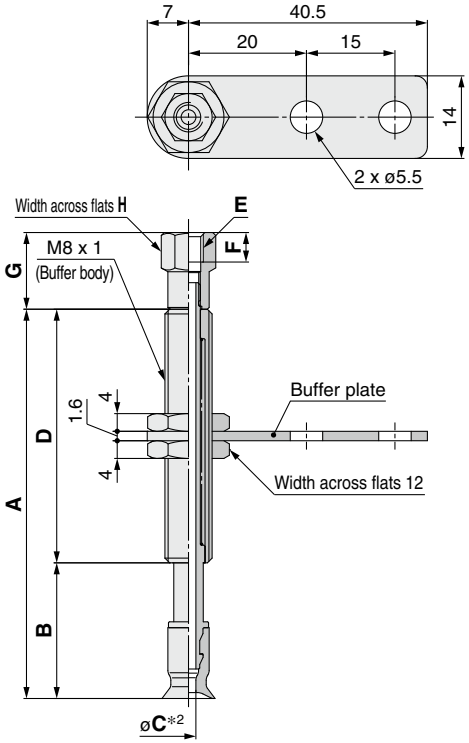

ZPT 02 U N J 6 - B3 - A8

❶ ❷ ❸ ❹ ❺ ❻

❸ Buffer specification

J	Rotating
K	Non-rotating
JN	Rotating (Without buffer plate)
KN	Non-rotating (Without buffer plate)

❻ Connection thread (Male thread)

A8	M8 x 1

❺ Vacuum inlet

B3	M3 x 0.5	Female thread	
B5	M5 x 0.8		
04	ø4	One-touch fitting	KQ2H04-M5N
06	ø6		KQ2H06-M5N
N4	For ø4 nylon tubing	Barb fitting	
U4	For ø4 soft tubing		

Model									A	B	C*2	D
	Vacuum inlet direction	❶ Pad dia.	Form	❷ Material *1	❸ Buffer spec.	❹ Buffer stroke	❺ Vacuum inlet	❻ Connection thread				
ZP	T	02	U	N S U F GN GS	J K JN KN	6	B3 B5 04 06 N4 U4	A8	33	18	1.2	15
						10			66	23		43
						15			71	28		
						25			81	38		
		04				6			33	18	1.6	15
						10			66	23		43
						15			71	28		
						25			81	38		
		06 08				6			33	18	J: 2.5 K: 2	15
						10			66	23		43
						15			71	28		
						25			81	38		

Dimensions Per Vacuum Inlet: Female Thread

Model									E	F	G	H
	Vacuum inlet direction	❶ Pad dia.	Form	❷ Material *1	❸ Buffer spec.	❹ Buffer stroke	❺ Vacuum inlet	❻ Connection thread				
ZP	T	02 04 06 08	U	N S U F GN GS	J K JN KN	6 10 15 25	B3	A8	M3 x 0.5	3	11	6
							B5		M5 x 0.8	5	13	8

Dimensions Per Vacuum Inlet: One-touch Fitting

Model									G	H	J	Fitting part min. hole size
	Vacuum inlet direction	❶ Pad dia.	Form	❷ Material *1	❸ Buffer spec.	❹ Buffer stroke	❺ Vacuum inlet	❻ Connection thread				
ZP	T	02 04 06 08	U	N S U F GN GS	J K JN KN	6 10 15 25	04	A8	27.7	8	4	ø2.5
							06			10	6	

Dimensions Per Vacuum Inlet: Barb Fitting

Model									G	H	Fitting part min. hole size
	Vacuum inlet direction	❶ Pad dia.	Form	❷ Material *1	❸ Buffer spec.	❹ Buffer stroke	❺ Vacuum inlet	❻ Connection thread			
ZP	T	02 04 06 08	U	N S U F GN GS	J K JN KN	6 10 15 25	N4	A8	14	6	ø1.8
							U4				

*1 N: NBR, S: Silicone rubber, U: Urethane rubber, F: FKM, GN: Conductive NBR, GS: Conductive silicone rubber

*2 Indicates the minimum hole size of the adapter or vacuum pad

Vacuum inlet: One-touch fitting

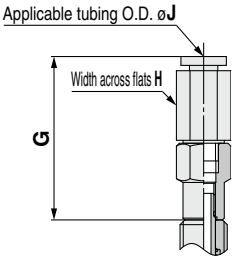

Vacuum inlet: Barb fitting

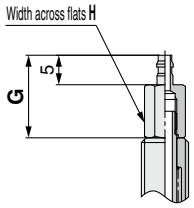

Construction p. 116
Buffer Assembly p. 124

Dimensions/Models

With buffer ø10 to ø50

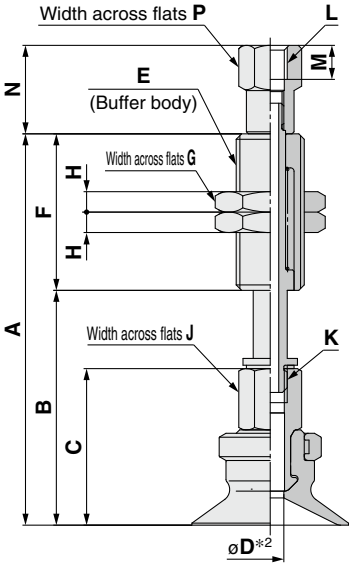

Construction	p. 118
Buffer Assembly	p. 124

ZPT 10 U N J 10 - B5 - A10

❶ ❷ ❹

❸ Buffer specification

J	Rotating
K	Non-rotating

❺ Vacuum inlet (Female thread)

B5	M5 x 0.8
B01	Rc1/8
N01	NPT1/8
T01	NPTF1/8

❻ Connection thread (Male thread)

A10	M10 x 1
A14	M14 x 1

Model																				
	Vacuum inlet direction	❶ Pad dia.	Form	❷ Material *1	❸ Buffer spec.	❹ Buffer stroke	❺ Vacuum inlet	❻ Connection thread	A	B	C	D*2	E	F	G	H	J	K
ZP	T	10 13	U	N S U F GN GS	J K	10	B5 04 06 N6 U6	A10	55.5	32.5	21	J: 2.5 K: 2	M10 x 1	23	14	3	8	M5 x 0.8
						20			93.5	42.5				51				
						30			103.5	52.5								
						40			139.5	62.5				77				
						50			149.5	72.5								
		16				10			56	33	21.5			23				
						20			94	43				51				
						30			104	53								
						40			140	63				77				
						50			150	73								
		20 25				10			57.5	34.5	23			23				
						20			95.5	44.5				51				
						30			105.5	54.5								
						40			141.5	64.5				77				
						50			151.5	74.5								
		32				10			58	35	23.5			23				
						20			96	45				51				
						30			106	55								
						40			142	65				77				
						50			152	75								
		40				10	B5 B01 N01 T01 06 08 N6 U6	A14	94.5	44.5	32	4	M14 x 1	50	19	4	12	M8 x 1.25
						20			104.5	54.5								
						30			114.5	64.5								
						50			159.5	84.5				75				
		50				10			95.5	45.5	33			50				
						20			105.5	55.5								
						30			115.5	65.5								
						50			160.5	85.5				75				

Dimensions Per Vacuum Inlet: Female Thread

Model									L	M	N	P
	Vacuum inlet direction	❶ Pad dia.	Form	❷ Material *1	❸ Buffer spec.	❹ Buffer stroke	❺ Vacuum inlet	❻ Connection thread				
ZP	T	10 13 16 20 25 32	U	N S U F GN GS	J K	10 20 30 40 50	B5	A10	M5 x 0.8	5	13	8
		40 50				10	B5	A14	M5 x 0.8	4.5	15	10
						20 30 50				5	9	
						10	B01 N01 T01		Rc1/8 NPT1/8 NPTF1/8	—	16.5	13
						20 30 50					12	

*1 N: NBR, S: Silicone rubber, U: Urethane rubber, F: FKM, GN: Conductive NBR, GS: Conductive silicone rubber
*2 Indicates the minimum hole size of the adapter or vacuum pad

Dimensions/Models

With buffer ø10 to ø50

ZPT 10 U N J 10 - 04 - A10

❶ ❷ ❹

Buffer specification ❸

J	Rotating
K	Non-rotating

❻ Connection thread (Male thread)

A10	M10 x 1
A14	M14 x 1

❺ Vacuum inlet

			Pad diameter ø10 to ø32	Pad diameter ø40, ø50 (10 st only)
04	ø4	One-touch fitting	KQ2H04-M5N	
06	ø6	One-touch fitting	KQ2H06-M5N	KQ2H06-01NS
08	ø8	One-touch fitting		KQ2H08-01NS
N6	For ø6 nylon tubing	Barb fitting		
U6	For ø6 soft tubing	Barb fitting		

Vacuum inlet: One-touch fitting

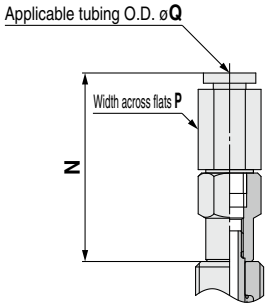

Vacuum inlet: Built-in One-touch fitting
Pad diameter: ø40, ø50 (Buffer stroke: 20 to 50 st)

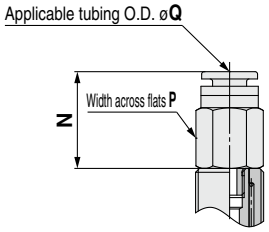

Vacuum inlet: Barb fitting

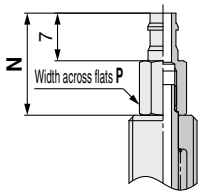

Dimensions Per Vacuum Inlet: One-touch Fitting

Model: Vacuum inlet direction	❶ Pad dia.	Form	❷ Material *1	❸ Buffer spec.	❹ Buffer stroke	❺ Vacuum inlet	❻ Connection thread	N	P	Q	Fitting part min. hole size
ZP T	10 13 16 20 25 32	U	N S U F GN GS	J K	10 20 30 40 50	04	A10	27.7	8	4	ø2.5
ZP T	10 13 16 20 25 32	U	N S U F GN GS	J K	10 20 30 40 50	06	A10	27.7	10	6	ø2.5
ZP T	40 50	U	N S U F GN GS	J K	10	06	A14	31.8	10	6	ø4.5
ZP T	40 50	U	N S U F GN GS	J K	10	08	A14	35.9	14	8	ø6
ZP T	40 50	U	N S U F GN GS	J K	20 30 50	06	A14	19.9	12	6	ø3
ZP T	40 50	U	N S U F GN GS	J K	20 30 50	08	A14	24.9	14	8	ø3

Dimensions Per Vacuum Inlet: Barb Fitting

Model: Vacuum inlet direction	❶ Pad dia.	Form	❷ Material *1	❸ Buffer spec.	❹ Buffer stroke	❺ Vacuum inlet	❻ Connection thread	N	P	Fitting part min. hole size
ZP T	10 13 16 20 25 32	U	N S U F GN GS	J K	10 20 30 40 50	N6	A10	15	6	ø2.5
ZP T	10 13 16 20 25 32	U	N S U F GN GS	J K	10 20 30 40 50	U6	A10	15	6	ø2.5
ZP T	40 50	U	N S U F GN GS	J K	10	N6	A14	19	10	ø2.5
ZP T	40 50	U	N S U F GN GS	J K	10	U6	A14	19	10	ø2.5
ZP T	40 50	U	N S U F GN GS	J K	20 30 50	N6	A14	12	10	ø2.5
ZP T	40 50	U	N S U F GN GS	J K	20 30 50	U6	A14	12	10	ø2.5

*1 N: NBR, S: Silicone rubber, U: Urethane rubber, F: FKM, GN: Conductive NBR, GS: Conductive silicone rubber

Construction p. 118
Buffer Assembly p. 124

Dimensions/Models

With buffer/One-touch fitting ø2 to ø8

The drawings show the type with a buffer plate.

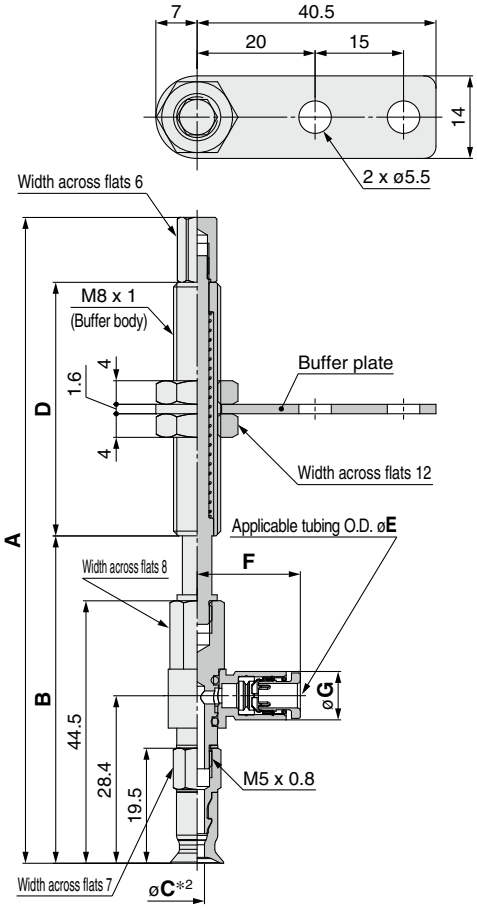

Construction p. 116
Buffer Assembly p. 125

ZPR 02 U N J 6 - 04 - A8

❶ ❷ ❸ ❹ ❺ ❻

❸ Buffer specification

J	Rotating
K	Non-rotating
JN	Rotating (Without buffer plate)
KN	Non-rotating (Without buffer plate)

❻ Connection thread (Male thread)

A8	M8 x 1

❺ Vacuum inlet (One-touch fitting)

04	ø4
06	ø6

Model									A	B	C*2	D
	Vacuum inlet direction	❶ Pad dia.	Form	❷ Material *1	❸ Buffer spec.	❹ Buffer stroke	❺ Vacuum inlet	❻ Connection thread				
ZP	R	02	U	N S U F GN GS	J K JN KN	6	04 06	A8	78.5	52.5	1.2	15
						10			109.5	55.5		43
						15			114.5	60.5		
						25			124.5	70.5		
		04				6			78.5	52.5	1.6	15
						10			109.5	55.5		43
						15			114.5	60.5		
						25			124.5	70.5		
		06 08				6			78.5	52.5	2.5	15
						10			109.5	55.5		43
						15			114.5	60.5		
						25			124.5	70.5		

Dimensions Per Vacuum Inlet

Model									E	F	G	Fitting part min. hole size
	Vacuum inlet direction	❶ Pad dia.	Form	❷ Material *1	❸ Buffer spec.	❹ Buffer stroke	❺ Vacuum inlet	❻ Connection thread				
ZP	R	02 04 06 08	U	N S U F GN GS	J K JN KN	6 10 15 25	04	A8	4	17.5	8.2	ø2.5
							06		6	18.3	10.4	ø4

*1 N: NBR, S: Silicone rubber, U: Urethane rubber, F: FKM, GN: Conductive NBR, GS: Conductive silicone rubber
*2 Indicates the minimum hole size of the adapter or vacuum pad

Dimensions/Models

With buffer/One-touch fitting ø10 to ø50

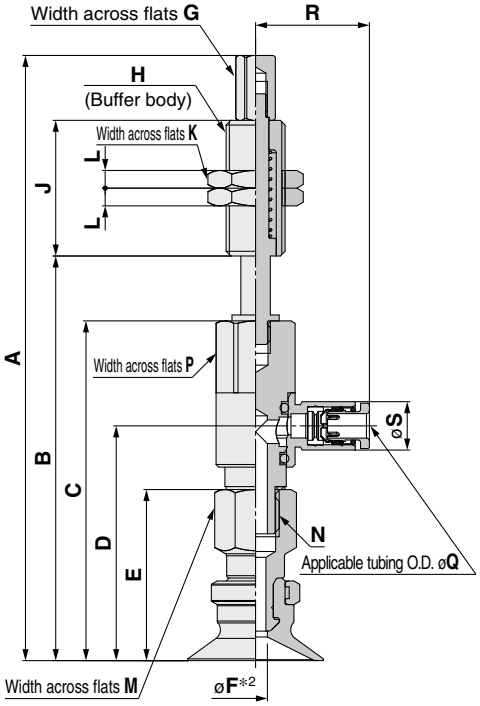

Construction p. 118
Buffer Assembly p. 125

ZPR 10 U N J 10 - 04 - A10

❶ ❷ ❹

Buffer specification ❸

J	Rotating
K	Non-rotating

❻ Connection thread (Male thread)

A10	M10 x 1
A14	M14 x 1

❺ Vacuum inlet (One-touch fitting)

04	ø4
06	ø6
08	ø8

Model									A	B	C	D	E	*2 F	G	H	J	K	L	M	N
	Vacuum inlet direction	❶ Pad dia.	Form	❷ *1 Material	❸ Buffer spec.	❹ Buffer stroke	❺ Vacuum inlet	❻ Connection thread													
ZP	R	10 13	U	N S U F GN GS	J K	10	04 06	A10	91	57	46	29.9	21	2.5	6	M10 x 1	23	14	3	8	M5 x 0.8
						20			129	67							51				
						30			139	77											
						40			175	87							77				
						50			185	97											
		16				10			91.5	57.5	46.5	30.4	21.5				23				
						20			129.5	67.5							51				
						30			139.5	77.5											
						40			175.5	87.5							77				
						50			185.5	97.5											
		20 25				10	04 06 08		102.6	68.6	57.6	39.8	29	3.5			23			12	M8 x 1.25
						20			140.6	78.6							51				
						30			150.6	88.6											
						40			186.6	98.6							77				
						50			196.6	108.6											
		32				10			103.1	69.1	58.1	40.3	29.5				23				
						20			141.1	79.1							51				
						30			151.1	89.1											
						40			187.1	99.1							77				
						50			197.1	109.6											
		40				10	06 08	A14	140.6	72.6	60.6	42.8	32	4	10	M14 x 1	50	19	4	12	M8 x 1.25
						20			137.6	82.6											
						30			147.6	92.6											
						50			192.6	112.6							75				
		50				10			141.6	73.6	61.6	43.8	33				50				
						20			138.6	83.6											
						30			148.6	93.6											
						50			193.6	113.6							75				

Dimensions Per Vacuum Inlet

Model									P	Q	R	S	Fitting part min. hole size
	Vacuum inlet direction	❶ Pad dia.	Form	❷ *1 Material	❸ Buffer spec.	❹ Buffer stroke	❺ Vacuum inlet	❻ Connection thread					
ZP	R	10 13 16	U	N S U F GN GS	J K	10 20 30 40 50	04	A10	8	4	17.5	8.2	ø2.5
							06			6	18.3	10.4	ø4
		20 25 32				10 20 30 40 50	04		12	4	19.3	8.2	ø3
							06			6	20.5	10.4	ø4.5
							08		16	8	23.5	13.2	ø6
		40 50				10 20 30 50	06	A14	12	6	20.5	10.4	ø4.5
							08		16	8	23.5	13.2	ø6

*1 N: NBR, S: Silicone rubber, U: Urethane rubber, F: FKM, GN: Conductive NBR, GS: Conductive silicone rubber

*2 Indicates the minimum hole size of the adapter or vacuum pad

Dimensions/Models

With buffer/barb fitting ø2 to ø8

The drawings show the type with a buffer plate.

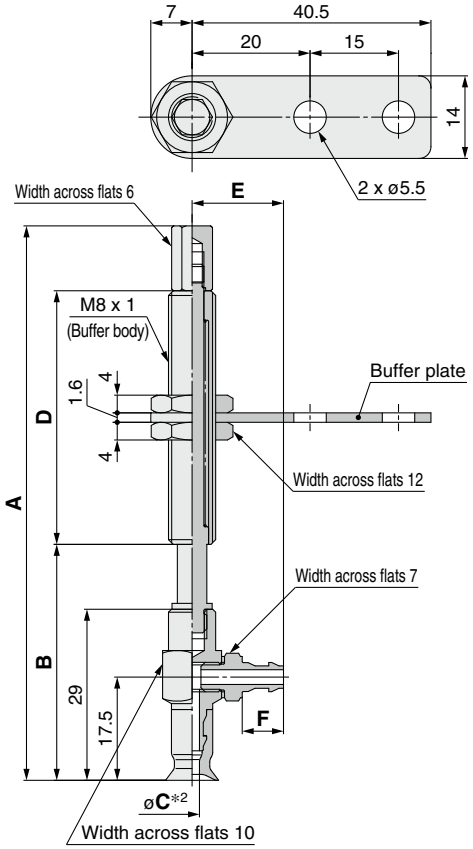

Construction p. 116
Buffer Assembly p. 126

ZPY 02 U N J 6 - N4 - A8

❶ ❷ ❹

Buffer specification ❸

J	Rotating
K	Non-rotating
JN	Rotating (Without buffer plate)
KN	Non-rotating (Without buffer plate)

❻ Connection thread (Male thread)

A8	M8 x 1

❺ Vacuum inlet (Barb fitting)

N4	For ø4 nylon tubing	M-5AN-4
N6	For ø6 nylon tubing	M-5AN-6
U4	For ø4 soft tubing	M-5AU-4
U6	For ø6 soft tubing	M-5AU-6

Model									A	B	C*2	D
	Vacuum inlet direction	❶ Pad dia.	Form	❷ *1 Material	❸ Buffer spec.	❹ Buffer stroke	❺ Vacuum inlet	❻ Connection thread				
ZP	Y	02	U	N S U F GN GS	J K JN KN	6	N4 N6 U4 U6	A8	63	37	1.2	15
						10			94	40		43
						15			99	45		
						25			109	55		
		04				6			63	37	1.6	15
						10			94	40		43
						15			99	45		
						25			109	55		
		06 08				6			63	37	2.5	15
						10			94	40		43
						15			99	45		
						25			109	55		

Dimensions Per Vacuum Inlet

Model									E	F	Fitting part min. hole size
	Vacuum inlet direction	❶ Pad dia.	Form	❷ *1 Material	❸ Buffer spec.	❹ Buffer stroke	❺ Vacuum inlet	❻ Connection thread			
ZP	Y	02 04 06 08	U	N S U F GN GS	J K JN KN	6 10 15 25	N4 U4	A8	13.5	5	ø1.8
							N6 U6		15.5	7	ø2.5

*1 N: NBR, S: Silicone rubber, U: Urethane rubber, F: FKM, GN: Conductive NBR, GS: Conductive silicone rubber
*2 Indicates the minimum hole size of the adapter or vacuum pad

Dimensions/Models

With buffer/barb fitting ø10 to ø50

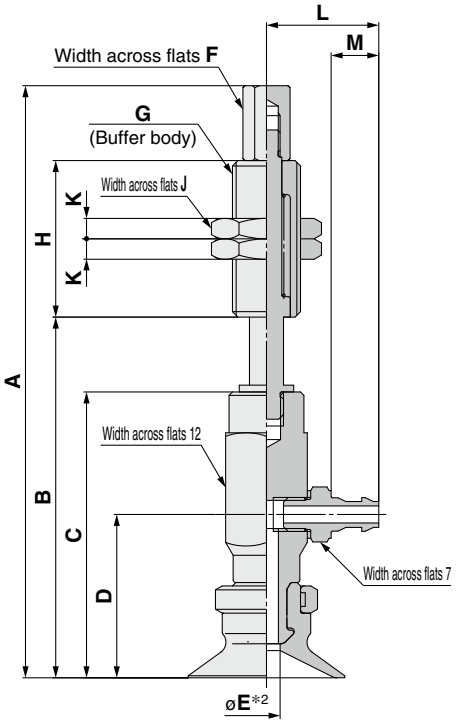

Construction	p. 118
Buffer Assembly	p. 126

ZPY 10 U N J 10 - N4 - A10

❶ ❷ ❹

Buffer specification ❸

J	Rotating
K	Non-rotating

❻ Connection thread (Male thread)

A10	M10 x 1
A14	M14 x 1

❺ Vacuum inlet (Barb fitting)

N4	For ø4 nylon tubing	M-5AN-4
N6	For ø6 nylon tubing	M-5AN-6
U4	For ø4 soft tubing	M-5AU-4
U6	For ø6 soft tubing	M-5AU-6

Model																				
	Vacuum inlet direction	❶ Pad dia.	Form	❷ Material *1	❸ Buffer spec.	❹ Buffer stroke	❺ Vacuum inlet	❻ Connection thread	A	B	C	D	E *2	F	G	H	J	K
ZP	Y	10 13	U	N S U F GN GS	J K	10	N4 N6 U4 U6	A10	83	49	38	22	2.5	6	M10 x 1	23	14	3
						20			121	59						51		
						30			131	69								
						40			167	79						77		
						50			177	89								
		16				10			83.5	49.5	38.5	22.5				23		
						20			121.5	59.5						51		
						30			131.5	69.5								
						40			167.5	79.5						77		
						50			177.5	89.5								
		20 25				10			87	53	42	24	3.5	6	M10 x 1	23	14	3
						20			125	63						51		
						30			135	73								
						40			171	83						77		
						50			181	93								
		32				10			87.5	53.5	42.5	24.5				23		
						20			125.5	63.5						51		
						30			135.5	73.5								
						40			171.5	83.5						77		
						50			181.5	93.5								
		40				10	N6 U6	A14	126.5	58.5	46.5	28.5	6	10	M14 x 1	50	19	4
						20			123.5	68.5								
						30			133.5	78.5								
						50			178.5	98.5						75		
		50				10			127.5	59.5	47.5	29.5				50		
						20			124.5	69.5								
						30			134.5	79.5								
						50			179.5	99.5						75		

Dimensions Per Vacuum Inlet

Model									L	M	Fitting part min. hole size
	Vacuum inlet direction	❶ Pad dia.	Form	❷ Material *1	❸ Buffer spec.	❹ Buffer stroke	❺ Vacuum inlet	❻ Connection thread			
ZP	Y	10 13 16 20 25 32	U	N S U F GN GS	J K	10 20 30 40 50	N4 U4	A10	14.5	5	ø1.8
							N6 U6		16.5	7	ø2.5
		40 50					N6 U6	A14	16.5	7	ø2.5

*1 N: NBR, S: Silicone rubber, U: Urethane rubber, F: FKM, GN: Conductive NBR, GS: Conductive silicone rubber

*2 Indicates the minimum hole size of the adapter or vacuum pad

Basic Pad

Flat Type with Ribs

ZP Series

How to Order

		Dimensions/ Models	Construction	Mounting Bracket Assembly
Pad unit	ZP□ 10 C N – □	p. 51	p. 117	From p. 121
With adapter	ZP□ T 10 C N – A5 – □	From p. 51	p. 117	From p. 121
With buffer	ZP T 10 C N J 10 – B5 – A10	From p. 57	p. 118	From p. 124

∗ Pad unit's sales unit: 10 pcs. (Pad diameter: ø20 mm or less)

❶ ❷ ❸ ❹ ❺ ❻ ❼ ❽ ❾

●Flat type with ribs

❶ Adapter (Lock ring) material

Nil	Brass
S∗1	Stainless steel (Stainless steel 304)

∗1 Only applicable to the pad unit (with lock ring) and the pad with adapter (Vacuum inlet direction: Vertical (Option "T"))

❷ Vacuum inlet direction

Nil	Pad unit
T	Vertical
R	Lateral (With One-touch fitting)
Y	Lateral (With barb fitting)

❸ Pad diameter

10	ø10
13	ø13
16	ø16
20	ø20
25	ø25
32	ø32
40	ø40
50	ø50

❹ Material

N	NBR
S	Silicone rubber∗1 ∗2
U	Urethane rubber
F	FKM
GN	Conductive NBR
GS	Conductive silicone rubber

∗1 Uses a material compliant with a dissolution test of the FDA (U.S. Food and Drug Administration) regulation 21CFR§177.2600 for "Rubber articles intended for repeated use."

∗2 Uses a material compliant with the standards for "Rubber apparatus (excluding baby drinking apparatus) and containers/packaging" (D3) (Partial revision: Japanese Ministry of Health, Labour, and Welfare Notification No. 595, 2012) in Section 3 "Apparatus and Containers/ Packaging" of the Japan Food Sanitation Act, Article 18 "Specifications and Standards for Food and Food Additives, etc." (Japanese Ministry of Health and Welfare Notification No. 370, 1959)

❺ Buffer specification

J	Rotating
K	Non-rotating

❻ Buffer stroke

Stroke [mm]	Pad diameter [mm]							
	ø10	ø13	ø16	ø20	ø25	ø32	ø40	ø50
10	●	●	●	●	●	●	●	●
20	●	●	●	●	●	●	●	●
30	●	●	●	●	●	●	●	●
40	●	●	●	●	●	●	—	—
50	●	●	●	●	●	●	●	●

With adapter

❼ Vacuum inlet

○: ZP□T/Vertical ●: ZPR/Lateral (With One-touch fitting) △: ZPY/Lateral (With barb fitting)

Type	Symbol	Size	Pad diameter [mm]		
			ø10 to ø16	ø20 to ø32	ø40, ø50
Male thread	**AS5**	M5 x 0.8	○∗4	○∗4	—
	AS6	M6 x 1	○∗4	○∗4	○∗4
	AG01	G1/8	○∗4	○∗4	—
	AG02	G1/4	—	—	○∗4
Female thread	**Nil**	M3 x 0.5	○ (❽Connection thread: A5/A6)	○ (❽Connection thread: A6)	○ (❽Connection thread: A6)
		M5 x 0.8	—	○ (❽Connection thread: A8)	○ (❽Connection thread: A8)
	B5	M5 x 0.8	○∗4	○∗4	—
	B6	M6 x 1	○∗4	○∗4	○∗4
	B8	M8 x 1.25	—	○∗4	○∗4
	BG01	G1/8	○∗4	○∗4	—
	BG02	G1/4	—	—	○∗4
	B01	Rc1/8	○∗4	○∗4	○∗4
	N01∗3	NPT1/8	○∗4	○∗4	○∗4
	T01∗3	NPTF1/8	○∗4	○∗4	○∗4
One-touch fitting	**04**	ø4	●	●	—
	06	ø6	●	●	●
	08	ø8	—	●	●
Barb fitting	**N4**	For ø4 nylon tubing∗1	△	△	—
	N6	For ø6 nylon tubing∗1	△	△	△
	U4	For ø4 soft tubing∗2	△	△	—
	U6	For ø6 soft tubing∗2	△	△	△

∗1 Nylon tube piping ∗2 Soft nylon/Polyurethane tube piping
∗3 Not compatible with stainless steel materials ∗4 Use the connection thread.

❽ Connection thread

○: ZP□T/Vertical ●: ZPR/Lateral (With One-touch fitting) △: ZPY/Lateral (With barb fitting)

Type	Symbol	Size	Pad diameter [mm]		
			ø10 to ø16	ø20 to ø32	ø40, ø50
Male thread∗1	**A5**	M5 x 0.8	○∗2●△	—	—
	A6	M6 x 1	○∗2●△	○∗2●△	○∗2●△
	A8	M8 x 1	—	○∗2●△	○∗2●△
Female thread	**B5**	M5 x 0.8	●△	●△	—
	B6	M6 x 1	●△	●△	●△
	B8	M8 x 1.25	—	●△	●△

∗1 The mounting nut is shipped together with the product (unassembled). ∗2 ○: ZP□T/Vertical comes with a vacuum inlet (female thread).

With buffer

❼ Vacuum inlet

○: ZPT/Vertical ●: ZPR/Lateral (With One-touch fitting) △: ZPY/Lateral (With barb fitting)

Type	Symbol	Size	Pad diameter [mm]		
			ø10 to ø16	ø20 to ø32	ø40, ø50
Female thread	**B5**	M5 x 0.8	○	○	○
	B01	Rc1/8	—	—	○
	N01	NPT1/8	—	—	○
	T01	NPTF1/8	—	—	○
One-touch fitting	**04**	ø4	○●	○●	—
	06	ø6	○●	○●	○●
	08	ø8	—	●	○●
Barb fitting	**N4**	For ø4 nylon tubing∗1	△	△	—
	N6	For ø6 nylon tubing∗1	○△	○△	○△
	U4	For ø4 soft tubing∗2	△	△	—
	U6	For ø6 soft tubing∗2	○△	○△	○△

∗1 Nylon tube piping
∗2 Soft nylon/Polyurethane tube piping

❽ Connection thread

○: ZPT/Vertical ●: ZPR/Lateral (With One-touch fitting) △: ZPY/Lateral (With barb fitting)

Type	Symbol	Size	Pad diameter [mm]		
			ø10 to ø16	ø20 to ø32	ø40, ø50
Male thread∗1	**A10**	M10 x 1	○●△	○●△	—
	A14	M14 x 1	—	—	○●△

∗1 The mounting nut and ○: ZPT/Vertical buffer are shipped together with the product (unassembled).

❾ Lock ring

Symbol	Pad diameter
	All sizes
Nil	With lock ring
X19	Without lock ring

Lock ring unit

Part no.	Pad diameter [mm]
ZP□L1	ø10 to ø16
ZP□L2	ø20 to ø32
ZP□L3	ø40, ø50

□: Nil/Brass S/Stainless steel

∗ The pad unit lock ring is shipped together with the product (unassembled).

Dimensions/Models

Single unit ø10 to ø50

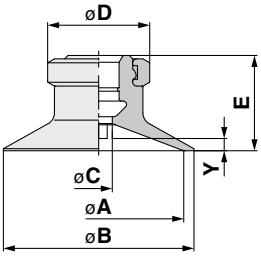

Construction p. 117
Mounting Bracket Assembly From p. 121

ZP □ 10 C N
❶ ❷ ❸

❶ Lock ring material

Nil	Brass
S	Stainless steel (Stainless steel 304)

Model					A	B	C	D	E	Y
	❶ Lock ring material	❷ Pad dia.	Form	❸ Material *1						
ZP	Nil S	10	C	N S U F GN GS	10	12	4	13	12	1.7
		13			13	15				1.8
		16			16	18			12.5	1.2
		20			20	23		15	14	1.7
		25			25	28				1.8
		32			32	35			14.5	2.3
		40			40	43	7	18	18.5	3.3
		50			50	53			19.5	3.8

*1 N: NBR, S: Silicone rubber, U: Urethane rubber, F: FKM, GN: Conductive NBR, GS: Conductive silicone rubber

With adapter ø10 to ø50

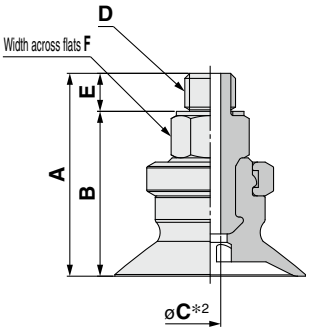

Construction p. 117
Adapter Assembly p. 121

ZP □ T 10 C N - AS5
❶ ❷ ❸ ❹

❶ Adapter (Lock ring) material

Nil	Brass
S	Stainless steel (Stainless steel 304)

❹ Vacuum inlet (Male thread)

AS5	M5 x 0.8
AS6	M6 x 1
AG01	G1/8
AG02	G1/4

Model							A	B	C*2	D	E	F
	❶ Adapter material	Vacuum inlet direction	❷ Pad dia.	Form	❸ Material *1	❹ Vacuum inlet						
ZP	Nil S	T	10 13	C	N S U F GN GS	AS5	21	17.5	2.5	M5 x 0.8	3.5	8
			16				21.5	18				
			20 25				23	19.5				
			32				23.5	20				
			10 13			AS6	22	17.5	2.5	M6 x 1	4.5	8
			16				22.5	18				
			20 25				24	19.5				
			32				24.5	20				
			40				29.5	25				12
			50				30.5	26				
			10 13			AG01	30	24.5	2.5	G1/8	5.5	17
			16				30.5	25				
			20 25				32	26.5	4			
			32				32.5	27				
			40			AG02	39	32.5	7	G1/4	6.5	21
			50				40	33.5				

*1 N: NBR, S: Silicone rubber, U: Urethane rubber, F: FKM, GN: Conductive NBR, GS: Conductive silicone rubber
*2 Indicates the minimum hole size of the adapter or vacuum pad

Dimensions/Models

With adapter ø10 to ø50

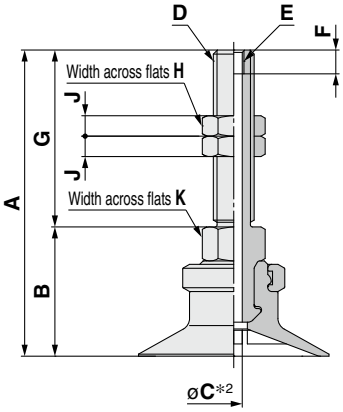

Construction p. 117
Adapter Assembly p. 121

ZP □ T 10 C N - A5
❶ ❷ ❸ ❹

❶ Adapter (Lock ring) material

Nil	Brass
S	Stainless steel (Stainless steel 304)

❹ Connection thread (Male thread)

A5	M5 x 0.8 (M3 x 0.5 With female thread)
A6	M6 x 1 (M3 x 0.5 With female thread)
A8	M8 x 1 (M5 x 0.8 With female thread)

Model							A	B	C*2	D	E	F	G	H	J	K
	❶ Adapter material	Vacuum inlet direction	❷ Pad dia.	Form	❸ Material*1	❹ Connection thread										
ZP	Nil S	T	10 13	C	N S U F GN GS	A5	38	17	2.5	M5 x 0.8	M3 x 0.5	3.5	21	8	4	8
			16				38.5	17.5								
			10 13			A6	43	17	2.5	M6 x 1	M3 x 0.5	3.5	26	8	4	8
			16				43.5	17.5								
			20 25				45	19								
			32				45.5	19.5								
			40				50.5	24.5								12
			50				51.5	25.5								
			20 25			A8	40	24	4	M8 x 1	M5 x 0.8	5	16	12	4	12
			32				40.5	24.5	4.2							
			40													
			50				41.5	25.5								

*1 N: NBR, S: Silicone rubber, U: Urethane rubber, F: FKM, GN: Conductive NBR, GS: Conductive silicone rubber
*2 Indicates the minimum hole size of the adapter or vacuum pad

Dimensions/Models

With adapter ø10 to ø50

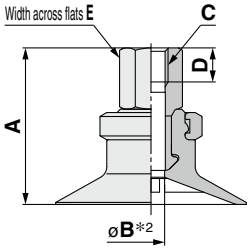

Construction p. 117
Adapter Assembly p. 121

ZP □ T 10 C N - B5
❶ ❷ ❸ ❹

❶ Adapter (Lock ring) material

Nil	Brass
S	Stainless steel (Stainless steel 304)

❹ Vacuum inlet (Female thread)

B5	M5 x 0.8
B6	M6 x 1
B8	M8 x 1.25
BG01	G1/8
BG02	G1/4
B01	Rc1/8
N01*1	NPT1/8
T01*1	NPTF1/8

*1 Not compatible with stainless steel materials

Model							A	B*2	C	D	E
	❶ Adapter material	Vacuum inlet direction	❷ Pad dia.	Form	❸ Material*1	❹ Vacuum inlet					
ZP	Nil S	T	10 13	C	N S U F GN GS	B5	21	2.5	M5 x 0.8	5	8
			16				21.5				
			20 25				23	4			
			32				23.5				
			10 13			B6	21	2.5	M6 x 1	6	8
			16				21.5				
			20 25				23	4			
			32				23.5				
			40				32	4.9			12
			50				33				
			20 25			B8	29	3.5	M8 x 1.25	8	12
			32				29.5				
			40				32	6.6			
			50				33				
			10 13			BG01	27	2.5	G1/8	7.4	14
			16				27.5				
			20 25				29	4			
			32				29.5				
			40			BG02	38	7	G1/4	11	17
			50				39				
			10 13			B01 N01*3 T01*3	27	2.5	Rc1/8 NPT1/8 NPTF1/8	—	12
			16				27.5				
			20 25				29	3.5			
			32				29.5				
			40				32	7			
			50				33				

*1 N: NBR, S: Silicone rubber, U: Urethane rubber, F: FKM, GN: Conductive NBR, GS: Conductive silicone rubber
*2 Indicates the minimum hole size of the adapter or vacuum pad
*3 Not compatible with stainless steel materials

Dimensions/Models

With adapter/One-touch fitting ø10 to ø50

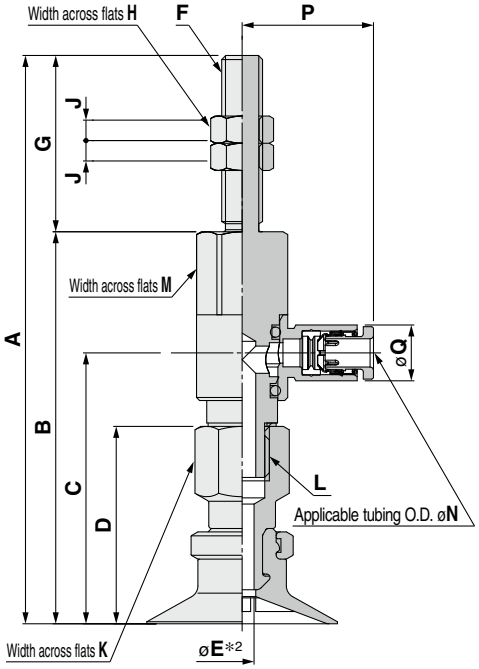

ZPR 10 C N - 04 - A5

❶ ❷ ❸ ❹

❸ Vacuum inlet (One-touch fitting)

04	ø4
06	ø6
08	ø8

❹ Connection thread (Male thread)

A5	M5 x 0.8
A6	M6 x 1
A8	M8 x 1

Model							A	B	C	D	*2 E	F	G	H	J	K	L
	Vacuum inlet direction	❶ Pad dia.	Form	❷ Material *1	❸ Vacuum inlet	❹ Connection thread											
ZP	R	10 13	C	N S U F GN GS	04 06 08	A5	67	46	29.9	21	2.5	M5 x 0.8	21	8	4	8	M5 x 0.8
		16					67.5	46.5	30.4	21.5							
		10 13				A6	72	46	29.9	21	2.5	M6 x 1	26	8	4	8	M5 x 0.8
		16					72.5	46.5	30.4	21.5							
		20 25					83.5	57.6	39.8	29	3.5		25.9			12	M8 x 1.25
		32					84	58.1	40.3	29.5							
		40					86.5	60.6	42.8	32	4						
		50					87.5	61.6	43.8	33							
		20 25				A8	73.5	57.6	39.8	29	3.5	M8 x 1	15.9	12	4	12	M8 x 1.25
		32					74	58.1	40.3	29.5							
		40					76.5	60.6	42.8	32	4						
		50					77.5	61.6	43.8	33							

Construction p. 117
Adapter Assembly p. 122

Dimensions Per Vacuum Inlet

Model							M	N	P	Q	Fitting part min. hole size
	Vacuum inlet direction	❶ Pad dia.	Form	❷ Material *1	❸ Vacuum inlet	❹ Connection thread					
ZP	R	10 13 16	C	N S U F GN GS	04	A5 A6	8	4	17.5	8.2	ø2.5
					06			6	18.3	10.4	ø4
		20 25 32			04	A6 A8	12	4	19.3	8.2	ø3
					06			6	20.5	10.4	ø4.5
					08		16	8	23.5	13.2	ø6
		40 50			06	A6 A8	12	6	20.5	10.4	ø4.5
					08		16	8	23.5	13.2	ø6

*1 N: NBR, S: Silicone rubber, U: Urethane rubber, F: FKM, GN: Conductive NBR, GS: Conductive silicone rubber
*2 Indicates the minimum hole size of the adapter or vacuum pad

Dimensions/Models

With adapter/One-touch fitting ø10 to ø50

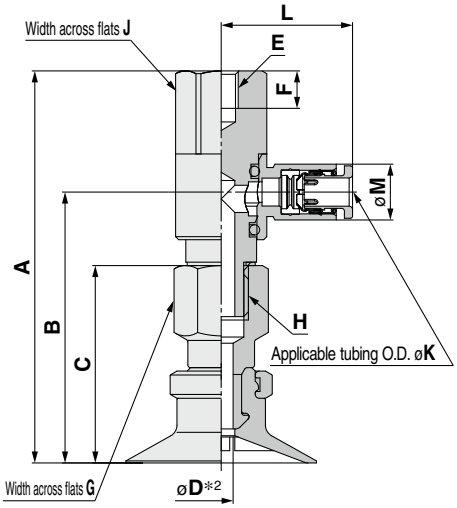

Construction p. 117
Adapter Assembly p. 122

ZPR 10 C N - 04 - B5
❶ ❷ ❸ ❹

❸ Vacuum inlet (One-touch fitting)

04	ø4
06	ø6
08	ø8

❹ Connection thread (Female thread)

B5	M5 x 0.8
B6	M6 x 1
B8	M8 x 1.25

Model							A	B	C	D*2	E	F	G	H
	Vacuum inlet direction	❶ Pad dia.	Form	❷ Material *1	❸ Vacuum inlet	❹ Connection thread								
ZP	R	10 13	C	N S U F GN GS	04 06 08	B5	46	29.9	21	2.5	M5 x 0.8	5.5	8	M5 x 0.8
		16					46.5	30.4	21.5					
		20 25					57.6	39.8	29	3.5			12	M8 x 1.25
		32					58.1	40.3	29.5					
		10 13				B6	46	29.9	21	2.5	M6 x 1	6.5	8	M5 x 0.8
		16					46.5	30.4	21.5					
		20 25					57.6	39.8	29	3.5			12	M8 x 1.25
		32					58.1	40.3	29.5					
		40					60.6	42.8	32	4				
		50					61.6	43.8	33					
		20 25				B8	57.6	39.8	29	3.5	M8 x 1.25	8.5	12	M8 x 1.25
		32					58.1	40.3	29.5					
		40					60.6	42.8	32	4				
		50					61.6	43.8	33					

Dimensions Per Vacuum Inlet

Model							J	K	L	M	Fitting part min. hole size
	Vacuum inlet direction	❶ Pad dia.	Form	❷ Material *1	❸ Vacuum inlet	❹ Connection thread					
ZP	R	10 13 16	C	N S U F GN GS	04	B5 B6	8	4	17.5	8.2	ø2.5
					06			6	18.3	10.4	ø4
		20 25 32			04	B5 B6 B8	12	4	19.3	8.2	ø3
					06			6	20.5	10.4	ø4.5
					08		16	8	23.5	13.2	ø6
		40 50			06	B6 B8	12	6	20.5	10.4	ø4.5
					08		16	8	23.5	13.2	ø6

*1 N: NBR, S: Silicone rubber, U: Urethane rubber, F: FKM, GN: Conductive NBR, GS: Conductive silicone rubber
*2 Indicates the minimum hole size of the adapter or vacuum pad

Dimensions/Models

With adapter/barb fitting ø10 to ø50

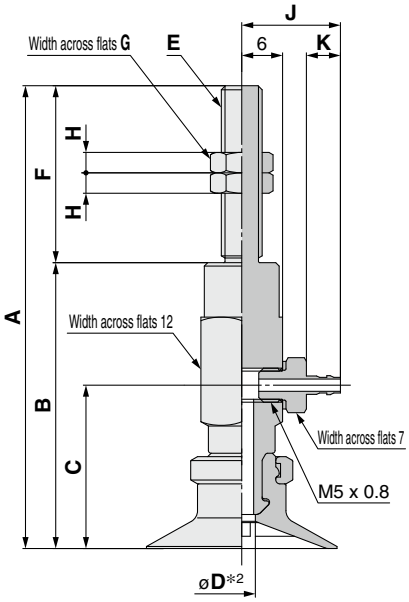

Construction	p. 117
Adapter Assembly	p. 123

ZPY 10 C N - N4 - A5

❶ ❷ ❸ ❹

❸ Vacuum inlet (Barb fitting)

N4	For ø4 nylon tubing	M-5AN-4
N6	For ø6 nylon tubing	M-5AN-6
U4	For ø4 soft tubing	M-5AU-4
U6	For ø6 soft tubing	M-5AU-6

❹ Connection thread (Male thread)

A5	M5 x 0.8
A6	M6 x 1
A8	M8 x 1

Model							A	B	C	D*2	E	F	G	H
	Vacuum inlet direction	❶ Pad dia.	Form	❷ Material*1	❸ Vacuum inlet	❹ Connection thread								
ZP	Y	10 13	C	N S U F GN GS	N4 N6 U4 U6	A5	59	38	22	2.5	M5 x 0.8	21	8	4
		16					59.5	38.5	22.5					
		10 13				A6	64	38	22	2.5	M6 x 1	26	8	4
		16					64.5	38.5	22.5					
		20 25					68	42	24	3.5				
		32					68.5	42.5	24.5					
		40					72.5	46.5	28.5	6				
		50					73.5	47.5	29.5					
		20 25				A8	58	42	24	3.5	M8 x 1	16	12	4
		32					58.5	42.5	24.5					
		40					62.5	46.5	28.5	6				
		50					63.5	47.5	29.5					

Dimensions Per Vacuum Inlet

Model							J	K	Fitting part min. hole size
	Vacuum inlet direction	❶ Pad dia.	Form	❷ Material*1	❸ Vacuum inlet	❹ Connection thread			
ZP	Y	10 13 16 20 25 32	C	N S U F GN GS	N4 U4	A5 A6	14.5	5	ø1.8
					N6 U6		16.5	7	ø2.5
		40 50			N6 U6	A6 A8	16.5	7	ø2.5

*1 N: NBR, S: Silicone rubber, U: Urethane rubber, F: FKM, GN: Conductive NBR, GS: Conductive silicone rubber
*2 Indicates the minimum hole size of the adapter or vacuum pad

Dimensions/Models

With adapter/barb fitting ø10 to ø50

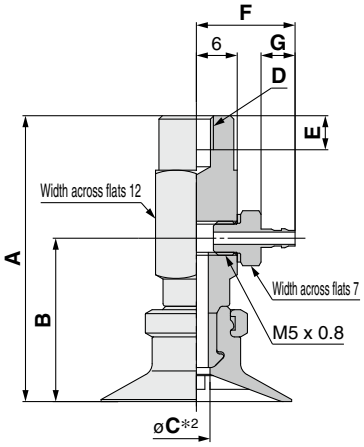

Construction p. 117
Adapter Assembly p. 123

ZPY 10 C N - N4 - B5
❶ ❷ ❸ ❹

❸ Vacuum inlet (Barb fitting)

N4	For ø4 nylon tubing	M-5AN-4
N6	For ø6 nylon tubing	M-5AN-6
U4	For ø4 soft tubing	M-5AU-4
U6	For ø6 soft tubing	M-5AU-6

❹ Connection thread (Female thread)

B5	M5 x 0.8
B6	M6 x 1
B8	M8 x 1.25

Model							A	B	C*2	D	E
	Vacuum inlet direction	❶ Pad dia.	Form	❷ Material*1	❸ Vacuum inlet	❹ Connection thread					
ZP	Y	10 13	C	N S U F GN GS	N4 N6 U4 U6	B5	38	22	2.5	M5 x 0.8	5
		16					38.5	22.5			
		20 25					42	24	3.5		
		32					42.5	24.5			
		10 13				B6	38	22	2.5	M6 x 1	6
		16					38.5	22.5			
		20 25					42	24	3.5		
		32					42.5	24.5			
		40					46.5	28.5	6		
		50					47.5	29.5			
		20 25				B8	42	24	3.5	M8 x 1.25	8
		32					42.5	24.5			
		40					46.5	28.5	6		
		50					47.5	29.5			

Dimensions Per Vacuum Inlet

Model							F	G	Fitting part min. hole size
	Vacuum inlet direction	❶ Pad dia.	Form	❷ Material*1	❸ Vacuum inlet	❹ Connection thread			
ZP	Y	10 13 16	C	N S U F GN GS	N4 U4	B4 B5	14.5	5	ø1.8
					N6 U6		16.5	7	ø2.5
		20 25 32			N4 U4	B5 B6 B8	14.5	5	ø1.8
					N6 U6		16.5	7	ø2.5
		40 50			N6 U6	B6 B8	16.5	7	ø2.5

*1 N: NBR, S: Silicone rubber, U: Urethane rubber, F: FKM, GN: Conductive NBR, GS: Conductive silicone rubber
*2 Indicates the minimum hole size of the adapter or vacuum pad

Dimensions/Models

With buffer ø10 to ø50

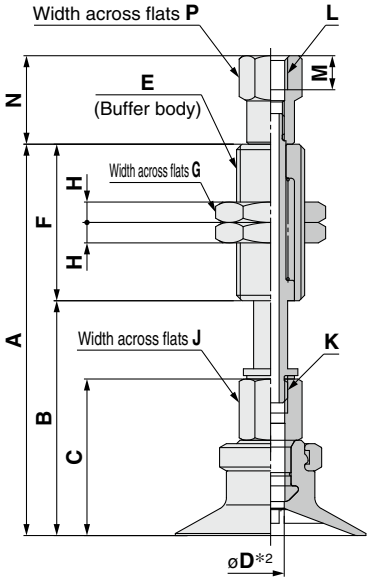

Construction	p. 118
Buffer Assembly	p. 124

ZPT 10 C N J 10 - B5 - A10

❶ ❷ ❹

Buffer specification ❸

J	Rotating
K	Non-rotating

❻ Connection thread (Male thread)

A10	M10 x 1
A14	M14 x 1

❺ Vacuum inlet (Female thread)

B5	M5 x 0.8
B01	Rc1/8
N01	NPT1/8
T01	NPTF1/8

Model																			
	Vacuum inlet direction	❶ Pad dia.	Form	❷ Material *1	❸ Buffer spec.	❹ Buffer stroke	❺ Vacuum inlet	❻ Connection thread	A	B	C	D*2	E	F	G	H	J	K
ZP	T	10 13	C	N S U F GN GS	J K	10	B5 04 06 N6 U6	A10	55.5	32.5	21	J: 2.5 K: 2	M10 x 1	23	14	3	8	M5 x 0.8
						20			93.5	42.5				51				
						30			103.5	52.5								
						40			139.5	62.5				77				
						50			149.5	72.5								
		16				10			56	33	21.5			23				
						20			94	43				51				
						30			104	53								
						40			140	63				77				
						50			150	73								
		20 25				10			57.5	34.5	23			23				
						20			95.5	44.5				51				
						30			105.5	54.5								
						40			141.5	64.5				77				
						50			151.5	74.5								
		32				10			58	35	23.5			23				
						20			96	45				51				
						30			106	55								
						40			142	65				77				
						50			152	75								
		40				10	B5 B01 N01 T01 06 08 N6 U6	A14	94.5	44.5	32	4	M14 x 1	50	19	4	12	M8 x 1.25
						20			104.5	54.5								
						30			114.5	64.5								
						50			159.5	84.5				75				
		50				10			95.5	45.5	33			50				
						20			105.5	55.5								
						30			115.5	65.5								
						50			160.5	85.5				75				

Dimensions Per Vacuum Inlet: Female Thread

Model									L	M	N	P
	Vacuum inlet direction	❶ Pad dia.	Form	❷ Material *1	❸ Buffer spec.	❹ Buffer stroke	❺ Vacuum inlet	❻ Connection thread				
ZP	T	10 13 16 20 25 32	C	N S U F GN GS	J K	10 20 30 40 50	B5	A10	M5 x 0.8	5	13	8
		40 50				10	B5	A14	M5 x 0.8	4.5	15	10
						20 30 50				5	9	
						10	B01 N01 T01		Rc1/8 NPT1/8 NPTF1/8	—	16.5	13
						20 30 50					12	

*1 N: NBR, S: Silicone rubber, U: Urethane rubber, F: FKM, GN: Conductive NBR, GS: Conductive silicone rubber

*2 Indicates the minimum hole size of the adapter or vacuum pad

Dimensions/Models

With buffer ø10 to ø50

ZPT 10 C N J 10 - 04 - A10
❶ ❷ ❹

Buffer specification ❸

J	Rotating
K	Non-rotating

❻ Connection thread (Male thread)

A10	M10 x 1
A14	M14 x 1

❺ Vacuum inlet

			Pad diameter ø10 to ø32	Pad diameter ø40, ø50 (10 st only)
04	ø4	One-touch fitting	KQ2H04-M5N	
06	ø6	One-touch fitting	KQ2H06-M5N	KQ2H06-01NS
08	ø8	One-touch fitting		KQ2H08-01NS
N6	For ø6 nylon tubing	Barb fitting		
U6	For ø6 soft tubing	Barb fitting		

Vacuum inlet: One-touch fitting

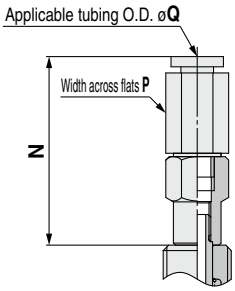

Vacuum inlet: Built-in One-touch fitting
Pad diameter: ø40, ø50 (Buffer stroke: 20 to 50 st)

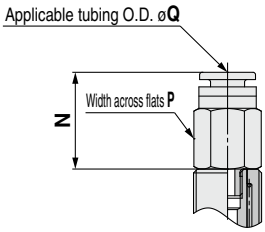

Vacuum inlet: Barb fitting

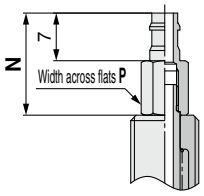

Dimensions Per Vacuum Inlet: One-touch Fitting

Model: Vacuum inlet direction	❶ Pad dia.	Form	❷ Material *1	❸ Buffer spec.	❹ Buffer stroke	❺ Vacuum inlet	❻ Connection thread	N	P	Q	Fitting part min. hole size
ZP T	10 13 16 20 25 32	C	N S U F GN GS	J K	10 20 30 40 50	04	A10	27.7	8	4	ø2.5
ZP T	10 13 16 20 25 32	C	N S U F GN GS	J K	10 20 30 40 50	06	A10	27.7	10	6	ø2.5
ZP T	40 50	C	N S U F GN GS	J K	10	06	A14	31.8	10	6	ø4.5
ZP T	40 50	C	N S U F GN GS	J K	10	08	A14	35.9	14	8	ø6
ZP T	40 50	C	N S U F GN GS	J K	20 30 50	06	A14	19.9	12	6	ø3
ZP T	40 50	C	N S U F GN GS	J K	20 30 50	08	A14	24.9	14	8	ø3

Dimensions Per Vacuum Inlet: Barb Fitting

Model: Vacuum inlet direction	❶ Pad dia.	Form	❷ Material *1	❸ Buffer spec.	❹ Buffer stroke	❺ Vacuum inlet	❻ Connection thread	N	P	Fitting part min. hole size
ZP T	10 13 16 20 25 32	C	N S U F GN GS	J K	10 20 30 40 50	N6	A10	15	6	ø2.5
ZP T	10 13 16 20 25 32	C	N S U F GN GS	J K	10 20 30 40 50	U6	A10	15	6	ø2.5
ZP T	40 50	C	N S U F GN GS	J K	10	N6	A14	19	10	ø2.5
ZP T	40 50	C	N S U F GN GS	J K	10	U6	A14	19	10	ø2.5
ZP T	40 50	C	N S U F GN GS	J K	20 30 50	N6	A14	12	10	ø2.5
ZP T	40 50	C	N S U F GN GS	J K	20 30 50	U6	A14	12	10	ø2.5

*1 N: NBR, S: Silicone rubber, U: Urethane rubber, F: FKM, GN: Conductive NBR, GS: Conductive silicone rubber

Construction p. 118
Buffer Assembly p. 124

Dimensions/Models

With buffer/One-touch fitting ø10 to ø50

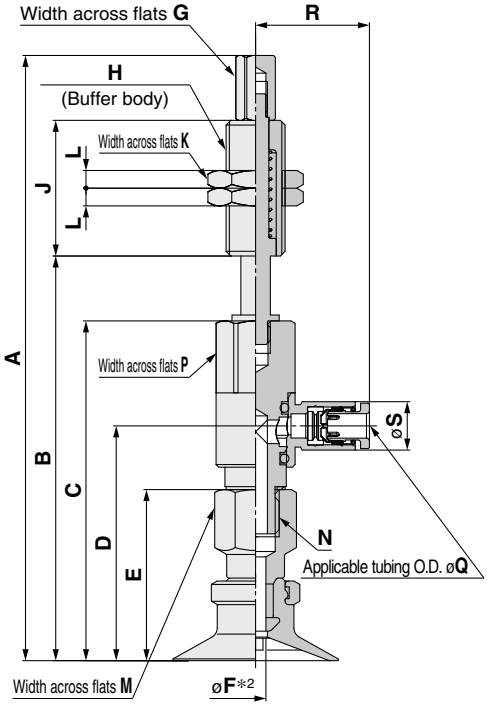

Construction	p. 118
Buffer Assembly	p. 125

ZPR 10 C N J 10 - 04 - A10

❶ ❷ ❹

❸ Buffer specification

J	Rotating
K	Non-rotating

❻ Connection thread (Male thread)

A10	M10 x 1
A14	M14 x 1

❺ Vacuum inlet (One-touch fitting)

04	ø4
06	ø6
08	ø8

Model																							
	Vacuum inlet direction	❶ Pad dia.	Form	❷ *1 Material	❸ Buffer spec.	❹ Buffer stroke	❺ Vacuum inlet	❻ Connection thread	A	B	C	D	E	*2 F	G	H	J	K	L	M	N
ZP	R	10 13	C	N S U F GN GS	J K	10	04 06	A10	91	57	46	29.9	21	2.5	6	M10 x 1	23	14	3	8	M5 x 0.8
						20			129	67							51				
						30			139	77											
						40			175	87							77				
						50			185	97											
		16				10			91.5	57.5	46.5	30.4	21.5				23				
						20			129.5	67.5							51				
						30			139.5	77.5											
						40			175.5	87.5							77				
						50			185.5	97.5											
		20 25				10	04 06 08		102.6	68.6	57.6	39.8	29	3.5			23			12	M8 x 1.25
						20			140.6	78.6							51				
						30			150.6	88.6											
						40			186.6	98.6							77				
						50			196.6	108.6											
		32				10			103.1	69.1	58.1	40.3	29.5				23				
						20			141.1	79.1							51				
						30			151.1	89.1											
						40			187.1	99.1							77				
						50			197.1	109.6											
		40				10	06 08	A14	140.6	72.6	60.6	42.8	32	4	10	M14 x 1	50	19	4	12	M8 x 1.25
						20			137.6	82.6											
						30			147.6	92.6											
						50			192.6	112.6							75				
		50				10			141.6	73.6	61.6	43.8	33				50				
						20			138.6	83.6											
						30			148.6	93.6											
						50			193.6	113.6							75				

Dimensions Per Vacuum Inlet

Model									P	Q	R	S	Fitting part min. hole size
	Vacuum inlet direction	❶ Pad dia.	Form	❷ *1 Material	❸ Buffer spec.	❹ Buffer stroke	❺ Vacuum inlet	❻ Connection thread					
ZP	R	10 13 16	C	N S U F GN GS	J K	10 20 30 40 50	04	A10	8	4	17.5	8.2	ø2.5
							06			6	18.3	10.4	ø4
		20 25 32				10 20 30 40 50	04		12	4	19.3	8.2	ø3
							06			6	20.5	10.4	ø4.5
							08		16	8	23.5	13.2	ø6
		40 50				10 20 30 50	06	A14	12	6	20.5	10.4	ø4.5
							08		16	8	23.5	13.2	ø6

*1 N: NBR, S: Silicone rubber, U: Urethane rubber, F: FKM, GN: Conductive NBR, GS: Conductive silicone rubber

*2 Indicates the minimum hole size of the adapter or vacuum pad

Dimensions/Models

With buffer/barb fitting ø10 to ø50

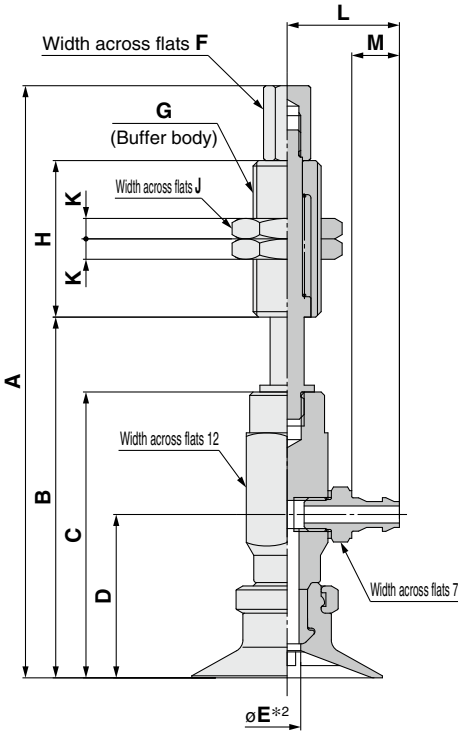

Construction p. 118
Buffer Assembly p. 126

ZPY 10 C N J 10 - N4 - A10

❶ ❷ ❹

❸ Buffer specification

J	Rotating
K	Non-rotating

❻ Connection thread (Male thread)

A10	M10 x 1
A14	M14 x 1

❺ Vacuum inlet (Barb fitting)

N4	For ø4 nylon tubing	M-5AN-4
N6	For ø6 nylon tubing	M-5AN-6
U4	For ø4 soft tubing	M-5AU-4
U6	For ø6 soft tubing	M-5AU-6

Model									A	B	C	D	E*2	F	G	H	J	K
	Vacuum inlet direction	❶ Pad dia.	Form	❷ Material*1	❸ Buffer spec.	❹ Buffer stroke	❺ Vacuum inlet	❻ Connection thread										
ZP	Y	10 13	C	N S U F GN GS	J K	10	N4 N6 U4 U6	A10	83	49	38	22	2.5	6	M10 x 1	23	14	3
						20			121	59						51		
						30			131	69								
						40			167	79						77		
						50			177	89								
		16				10			83.5	49.5	38.5	22.5				23		
						20			121.5	59.5						51		
						30			131.5	69.5								
						40			167.5	79.5						77		
						50			177.5	89.5								
		20 25				10			87	53	42	24	3.5	6	M10 x 1	23	14	3
						20			125	63						51		
						30			135	73								
						40			171	83						77		
						50			181	93								
		32				10			87.5	53.5	42.5	24.5				23		
						20			125.5	63.5						51		
						30			135.5	73.5								
						40			171.5	83.5						77		
						50			181.5	93.5								
		40				10	N6 U6	A14	126.5	58.5	46.5	28.5	6	10	M14 x 1	50	19	4
						20			123.5	68.5								
						30			133.5	78.5								
						50			178.5	98.5						75		
		50				10			127.5	59.5	47.5	29.5				50		
						20			124.5	69.5								
						30			134.5	79.5								
						50			179.5	99.5						75		

Dimensions Per Vacuum Inlet

Model									L	M	Fitting part min. hole size
	Vacuum inlet direction	❶ Pad dia.	Form	❷ Material*1	❸ Buffer spec.	❹ Buffer stroke	❺ Vacuum inlet	❻ Connection thread			
ZP	Y	10 13 16 20 25 32	C	N S U F GN GS	J K	10 20 30 40 50	N4 U4	A10	14.5	5	ø1.8
							N6 U6		16.5	7	ø2.5
		40 50					N6 U6	A14	16.5	7	ø2.5

*1 N: NBR, S: Silicone rubber, U: Urethane rubber, F: FKM, GN: Conductive NBR, GS: Conductive silicone rubber
*2 Indicates the minimum hole size of the adapter or vacuum pad

Basic Pad
Flat Type Ball Joint Type
ZP Series

How to Order

		Dimensions/ Models	Construction	Mounting Bracket Assembly
Pad unit	ZP 10 F N	p. 62	p. 119	From p. 127
With adapter	ZP T 10 F N – B5 – A8	From p. 62	p. 119	From p. 127
With buffer	ZP T 10 F N J 10 – B5 – A10	From p. 65	p. 120	From p. 129

∗ Pad unit's sales unit: 10 pcs. (Pad diameter: ø20 mm or less only)

❶ ❷ ❸ ❹ ❺ ❻ ❼

●Ball joint type

❶ Vacuum inlet direction

T	Vertical
R	Lateral (With One-touch fitting)

❷ Pad diameter

10	ø10
13	ø13
16	ø16
20	ø20
25	ø25
32	ø32
40	ø40
50	ø50

❺ Buffer stroke

Stroke [mm]	Pad diameter [mm]	
	ø10 to ø16	ø20 to ø50
10	●	●
20	●	●
30	●	●
40	●	—
50	●	●

❸ Material

N	NBR
S	Silicone rubber∗1 ∗2
U	Urethane rubber
F	FKM
GN	Conductive NBR
GS	Conductive silicone rubber

❹ Buffer specification

J	Rotating
K	Non-rotating

∗1 Uses a material compliant with a dissolution test of the FDA (U.S. Food and Drug Administration) regulation 21CFR§177.2600 for "Rubber articles intended for repeated use."

∗2 Uses a material compliant with the standards for "Rubber apparatus (excluding baby drinking apparatus) and containers/packaging" (D3) (Partial revision: Japanese Ministry of Health, Labour, and Welfare Notification No. 595, 2012) in Section 3 "Apparatus and Containers/Packaging" of the Japan Food Sanitation Act, Article 18 "Specifications and Standards for Food and Food Additives, etc." (Japanese Ministry of Health and Welfare Notification No. 370, 1959)

With adapter

❻ Vacuum inlet/ ❼ Connection thread

○: ZPT/Vertical ●: ZPR/Lateral (With One-touch fitting)

❻ Vacuum inlet			❼ Connection thread			Pad diameter [mm]		
Type	Symbol	Size	Type	Symbol	Size	ø10 to ø16	ø20 to ø32	ø40, ø50
Female thread	B5	M5 x 0.8	Male thread	A8	M8 x 1	○	—	—
				A10	M10 x 1	—	○	—
				A14	M14 x 1	—	—	○
—	Nil	—∗1	Female thread	B5	M5 x 0.8	○	○	—
				B8	M8 x 1.25	—	○	○
				B01	Rc1/8	—	○	○
				N01	NPT1/8	—	○	○
				T01	NPTF1/8	—	○	○
One-touch fitting	04	ø4		B5	M5 x 0.8	●	—	—
	06	ø6				●	●	●
				B8	M8 x 1.25	—	●	●
	08	ø8		B5	M5 x 0.8	—	●	●
				B8	M8 x 1.25	—	●	●

∗1 Use the connection thread.

With buffer

❻ Vacuum inlet

○: ZPT/Vertical ●: ZPR/Lateral (With One-touch fitting)

Type	Symbol	Size	Pad diameter [mm]		
			ø10 to ø16	ø20 to ø32	ø40, ø50
Female thread	B5	M5 x 0.8	○	—	—
	B01	Rc1/8	—	○	○
	N01	NPT1/8	—	○	○
	T01	NPTF1/8	—	○	○
One-touch fitting	04	ø4	○●	—	—
	06	ø6	○●	○●	○●
	08	ø8	—	○●	○●

❼ Connection thread ○: ZPT/Vertical ●: ZPR/Lateral

Type	Symbol	Size	Pad diameter [mm]		
			ø10 to ø16	ø20 to ø32	ø40, ø50
Male thread	A10	M10 x 1	○●	—	—
	A14	M14 x 1	—	○●	○●

Lock ring unit

Part no.	Pad diameter [mm]
ZPLF	ø40, ø50

∗ The following parts are shipped together with the product (unassembled).
- Mounting nut for the types with an adapter or a buffer
- Buffer for the type with a buffer (Vacuum inlet: Vertical)

Dimensions/Models

Single unit ø10 to ø50

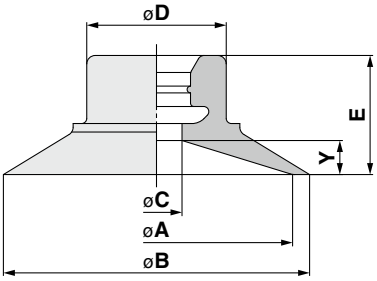

Construction	p. 119
Mounting Bracket Assembly	From p. 127

ZP 10 F N
❶ ❷

Model ❶ Pad dia.	Form	❷ *1 Material	A	B	C	D	E	Y
ZP 10	F	N S U F GN GS	10	12	3	8.2	6.5	1.5
13			13	15			7	2
16			16	18				
20			20	22	4	10.2	8.5	3
25			25	28				
32			32	35			9	
40			40	43	10	26	13	5
50			50	53	8		14	6

*1 N: NBR, S: Silicone rubber, U: Urethane rubber, F: FKM, GN: Conductive NBR, GS: Conductive silicone rubber

With adapter ø10 to ø50

ZPT 10 F N - B5 - A8
❶ ❷ ❸ ❹

❸ Vacuum inlet (Female thread)

B5	M5 x 0.8

❹ Connection thread (Male thread)

A8	M8 x 1
A10	M10 x 1
A14	M14 x 1

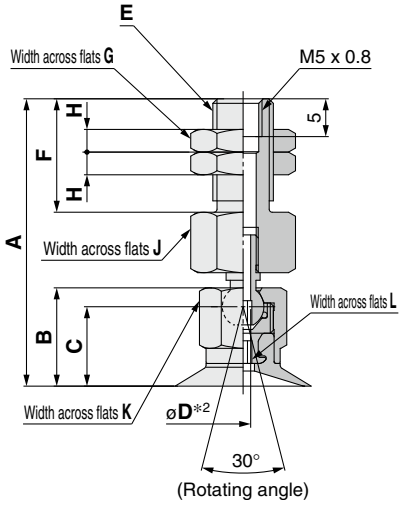

ø10 to ø32

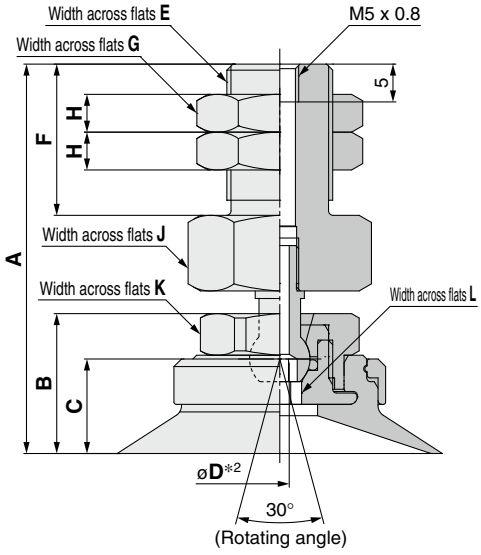

ø40, ø50

Model Vacuum inlet direction	❶ Pad dia.	Form	❷ *1 Material	❸ Vacuum inlet	❹ Connection thread	A	B	C	*2 D	E	F	G	H	J	K	L
ZP T	10	F	N S U F GN GS	B5	A8	37.5	12.5	10	2	M8 x 1	15	12	4	12	10	2
	13 16					38	13	10.5								
	20 25				A10	48.5	15.5	12.5	2	M10 x 1	20	14	3	16	12	3
	32					49	16	13								
	40				A14	51.5	18.5	12.5	2.5	M14 x 1	20	19	4	21	19	5
	50					52.5	19.5	13.5								

*1 N: NBR, S: Silicone rubber, U: Urethane rubber, F: FKM, GN: Conductive NBR, GS: Conductive silicone rubber
*2 Indicates the minimum hole size of the adapter or vacuum pad

Construction	p. 119
Adapter Assembly	p. 127

Dimensions/Models

With adapter ø10 to ø50

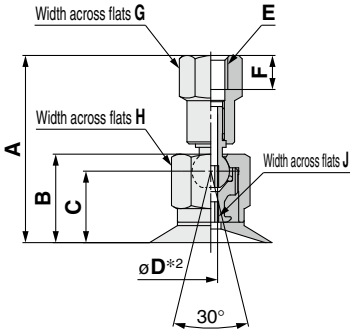

(Rotating angle)

ø10 to ø32

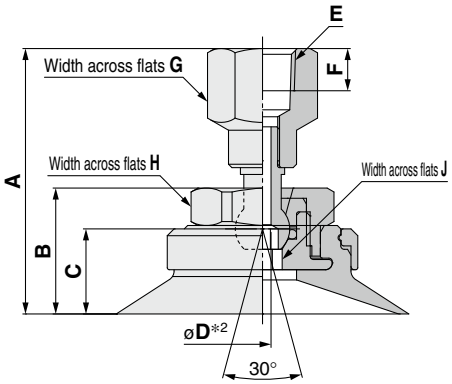

(Rotating angle)

ø40, ø50

Construction	p. 119
Adapter Assembly	p. 127

ZPT 10 F N - B5
❶ ❷ ❸

❸ Connection thread (Female thread)

B5	M5 x 0.8
B8	M8 x 1.25
B01	Rc1/8
N01	NPT1/8
T01	NPTF1/8

Model						A	B	C	D*2	E	F	G	H	J
	Vacuum inlet direction	❶ Pad dia.	Form	❷ Material *1	❸ Connection thread									
ZP	T	10	F	N S U F GN GS	B5	27	12.5	10	2	M5 x 0.8	5	8	10	2
		13 16				27.5	13	10.5						
		20 25				32	15.5	12.5				9	12	3
		32				32.5	16	13						
		20 25			B8	36	15.5	12.5	2	M8 x 1.25	8	12	12	3
		32				36.5	16	13						
		40				39	18.5	12.5	2.5				19	5
		50				40	19.5	13.5						
		20 25			B01 N01 T01	36	15.5	12.5	2	Rc1/8 NPT1/8 NPTF1/8		14	12	3
		32				36.5	16	13						
		40				39	18.5	12.5	2.5				19	5
		50				40	19.5	13.5						

*1 N: NBR, S: Silicone rubber, U: Urethane rubber, F: FKM, GN: Conductive NBR, GS: Conductive silicone rubber
*2 Indicates the minimum hole size of the adapter or vacuum pad

Dimensions/Models

With adapter/One-touch fitting ø10 to ø50

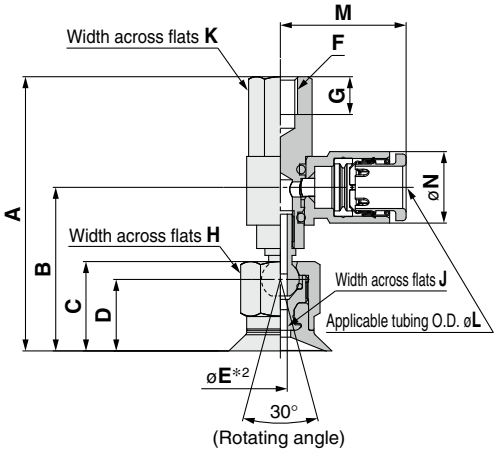

ø10 to ø32

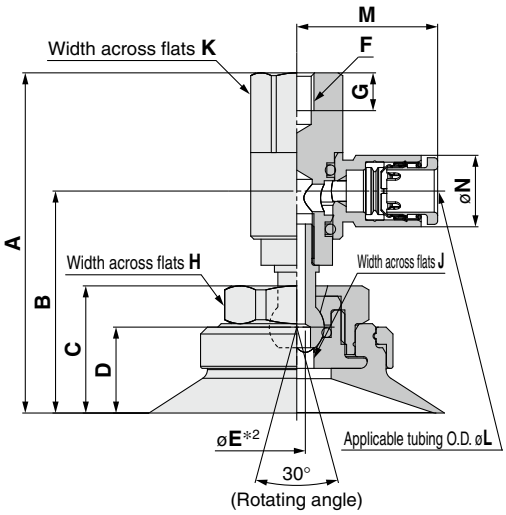

ø40, ø50

Construction p. 119
Adapter Assembly p. 128

ZPR 10 F N - 04 - B5
❶ ❷ ❸ ❹

❸ Vacuum inlet (One-touch fitting)

04	ø4
06	ø6
08	ø8

❹ Connection thread (Female thread)

B5	M5 x 0.8
B8	M8 x 1.25

Model							A	B	C	D	E*2	F	G	H	J
	Vacuum inlet direction	❶ Pad dia.	Form	❷ Material*1	❸ Vacuum inlet	❹ Connection thread									
ZP	R	10	F	N S U F GN GS	04 06 08	B5	39.5	23.4	12.5	10	2	M5 x 0.8	5.5	10	2
		13 16					40	23.9	13	10.5					
		20 25					46.5	29.3	15.5	12.5			5.5	12	3
		32					47	29.8	16	13					
		40					49.5	32.3	18.5	12.5	2.5			19	5
		50					50.5	33.3	19.5	13.5					
		20 25				B8	46.5	29.3	15.5	12.5	2	M8 x 1.25	8.5	12	3
		32					47	29.8	16	13					
		40					49.5	32.3	18.5	12.5	2.5			19	5
		50					50.5	33.3	19.5	13.5					

Dimensions Per Vacuum Inlet

Model							K	L	M	N	Fitting part min. hole size
	Vacuum inlet direction	❶ Pad dia.	Form	❷ Material*1	❸ Vacuum inlet	❹ Connection thread					
ZP	R	10 13 16	F	N S U F GN GS	04	B5	8	4	17.5	8.2	ø2.5
					06			6	18.3	10.4	ø4
		20 25 32 40 50			06	B5 B8	12	6	20.5	10.4	ø4.5
					08		16	8	23.5	13.2	ø6

*1 N: NBR, S: Silicone rubber, U: Urethane rubber, F: FKM, GN: Conductive NBR, GS: Conductive silicone rubber
*2 Indicates the minimum hole size of the adapter or vacuum pad

Dimensions/Models

With buffer ø10 to ø50

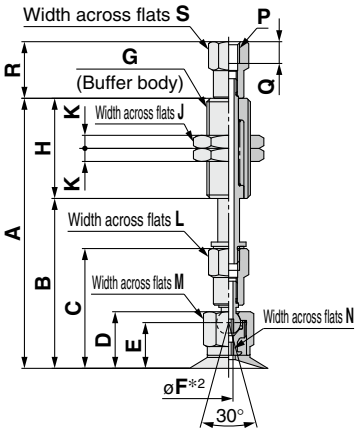

(Rotating angle)

ø10 to ø32

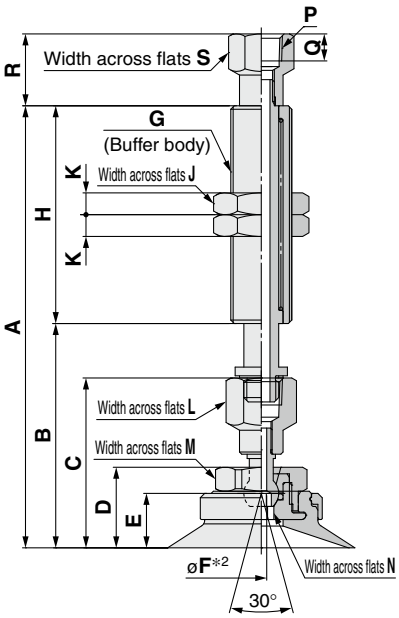

(Rotating angle)

ø40, ø50

ZPT 10 F N J 10 - B5 - A10

❶ ❷ ❸ ❹ ❺ ❻

❸ Buffer specification

J	Rotating
K	Non-rotating

❻ Connection thread (Male thread)

A10	M10 x 1
A14	M14 x 1

❺ Vacuum inlet

			Pad diameter ø10 to ø16	Pad diameter ø20 to ø50 (10 st only)
B5	M5 x 0.8	Female thread		
B01	Rc1/8	Female thread		
N01	NPT1/8	Female thread		
T01	NPTF1/8	Female thread		
04	ø4	One-touch fitting	KQ2H04-M5N	
06	ø6	One-touch fitting	KQ2H06-M5N	KQ2H06-01NS
08	ø8	One-touch fitting		KQ2H08-01NS

Model																													
	Vacuum inlet direction	❶ Pad dia.	Form	❷ *1 Material	❸ Buffer spec.	❹ Buffer stroke	❺ Vacuum inlet	❻ Connection thread	A	B	C	D	E	*2 F	G	H	J	K	L	M	N	P	Q	R	S
ZP	T	10	F	N S U F GN GS	J K	10	B5	A10	61.5	38.5	27	12.5	10	2	M10 x 1	23	14	3	8	10	2	M5 x 0.8	5	13	8
						20			99.5	48.5						51									
						30			109.5	58.5															
						40			145.5	68.5						77									
						50			155.5	78.5															
		13 16				10			62	39	27.5	13	10.5			23									
						20			100	49						51									
						30			110	59															
						40			146	69						77									
						50			156	79															
		20 25				10	B01 N01 T01	A14	98.5	48.5	36	15.5	12.5	2	M14 x 1	50	19	4	12	12	3	Rc1/8 NPT1/8 NPTF1/8		16.5	13
						20			108.5	58.5														12	
						30			118.5	68.5															
						50			163.5	88.5						75									
		32				10			99	49	36.5	16	13			50								16.5	
						20			109	59														12	
						30			119	69															
						50			164	89						75									
		40				10			101.5	51.5	39	18.5	12.5	2.5		50				19	5			16.5	
						20			111.5	61.5														12	
						30			121.5	71.5															
						50			166.5	91.5						75									
		50				10			102.5	52.5	40	19.5	13.5			50								16.5	
						20			112.5	62.5														12	
						30			122.5	72.5															
						50			167.5	92.5						75									

Vacuum inlet: One-touch fitting

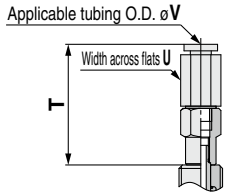

Vacuum inlet: Built-in One-touch fitting
Pad diameter: ø20 to ø50 (Buffer stroke: 20 to 50 st)

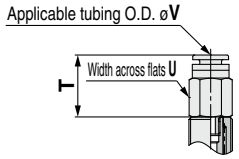

Dimensions Per Vacuum Inlet: One-touch Fitting

Model									T	U	V	Fitting part min. hole size
	Vacuum inlet direction	❶ Pad dia.	Form	❷ *1 Material	❸ Buffer spec.	❹ Buffer stroke	❺ Vacuum inlet	❻ Connection thread				
ZP	T	10 13 16	F	N S U F GN GS	J K	10 20 30 40 50	04	A10	27.7	8	4	ø2.5
							06			10	6	
		20 25 32 40 50				10	06	A14	31.8	10	6	ø4.5
							08		35.9	14	8	ø6
						20 30 50	06		19.9	12	6	ø3
							08		24.9	14	8	

*1 N: NBR, S: Silicone rubber, U: Urethane rubber, F: FKM, GN: Conductive NBR, GS: Conductive silicone rubber

*2 Indicates the minimum hole size of the adapter or vacuum pad

Construction p. 120
Buffer Assembly p. 129

Dimensions/Models

With buffer/One-touch fitting ø10 to ø50

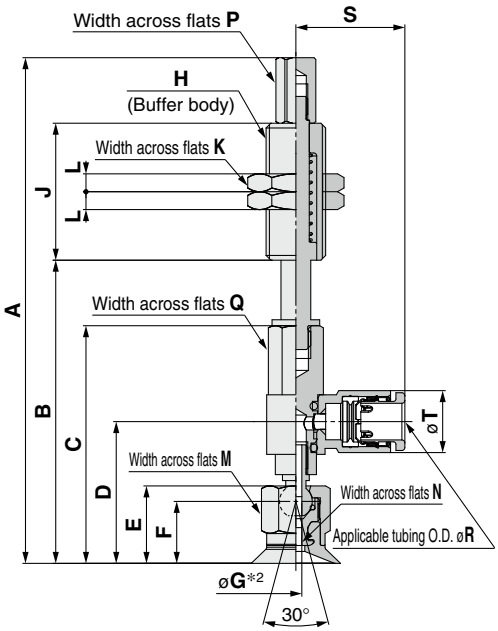

ø10 to ø32

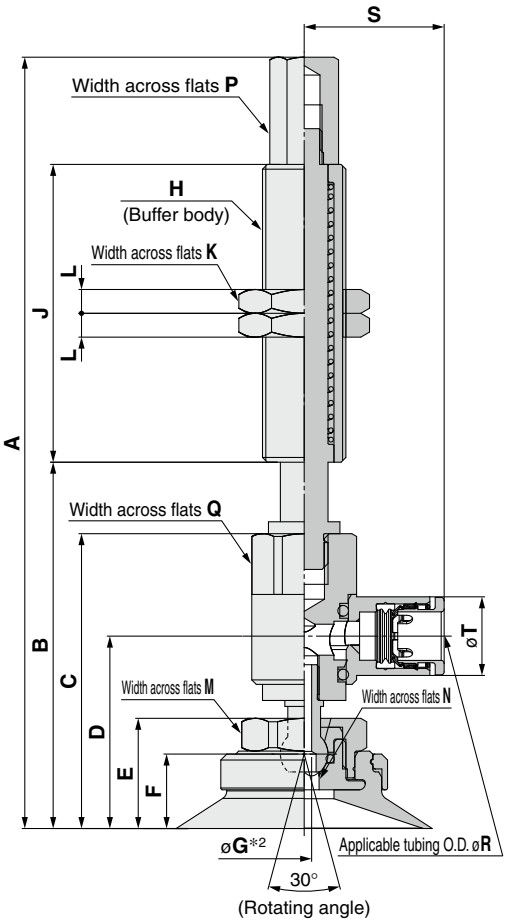

ø40, ø50

ZPR 10 F N J 10 - 04 - A10

❶ ❷ ❸ ❹ ❺ ❻

❸ Buffer specification

J	Rotating
K	Non-rotating

❻ Connection thread (Male thread)

A10	M10 x 1
A14	M14 x 1

❺ Vacuum inlet (One-touch fitting)

04	ø4
06	ø6
08	ø8

Model									A	B	C	D	E	F	G*2	H	J	K	L	M	N	P
	Vacuum inlet direction	❶ Pad dia.	Form	❷ Material*1	❸ Buffer spec.	❹ Buffer stroke	❺ Vacuum inlet	❻ Connection thread														
ZP	R	10	F	N S U F GN GS	J K	10	04 06	A10	84.5	50.5	39.5	23.4	12.5	10	2	M10 x1	23	14	3	10	2	6
						20			122.5	60.5							51					
						30			132.5	70.5												
						40			168.5	80.5							77					
						50			178.5	90.5												
		13 16				10			85	51	40	23.9	13	10.5			23					
						20			123	61							51					
						30			133	71												
						40			169	81							77					
						50			179	91												
		20 25				10	06 08	A14	126.5	58.5	46.5	29.3	15.5	12.5	2	M14 x1	50	19	4	12	3	10
						20			123.5	68.5												
						30			133.5	78.5												
						50			178.5	98.5							75					
		32				10			127	59	47	29.8	16	13			50					
						20			124	69												
						30			134	79												
						50			179	99							75					
		40				10			129.5	61.5	49.5	32.3	18.5	12.5	2.5		50			19	5	
						20			126.5	71.5												
						30			136.5	81.5												
						50			181.5	101.5							75					
		50				10			130.5	62.5	50.5	33.3	19.5	13.5			50					
						20			127.5	72.5												
						30			137.5	82.5												
						50			182.5	102.5							75					

Dimensions Per Vacuum Inlet: One-touch Fitting

Model									Q	R	S	T	Fitting part min. hole size
	Vacuum inlet direction	❶ Pad dia.	Form	❷ Material*1	❸ Buffer spec.	❹ Buffer stroke	❺ Vacuum inlet	❻ Connection thread					
ZP	R	10 13 16	F	N S U F GN GS	J K	10 20 30 40 50	04	A10	8	4	17.5	8.2	ø2.5
							06			6	18.3	10.4	ø4
		20 25 32 40 50				10	06	A14	12	6	20.5	10.4	ø4.5
							08		16	8	23.5	13.2	ø6
						20 30 50	06		12	6	20.5	10.4	ø4.5
							08		16	8	23.5	13.2	ø6

*1 N: NBR, S: Silicone rubber, U: Urethane rubber, F: FKM, GN: Conductive NBR, GS: Conductive silicone rubber
*2 Indicates the minimum hole size of the adapter or vacuum pad

Construction p. 120
Buffer Assembly p. 130

Basic Pad

Bellows Type

ZP Series

How to Order

		Dimensions/ Models	Construction	Mounting Bracket Assembly
Pad unit	ZP□ 06 B N – □	p. 68	p. 115 p. 117	From p. 121
With adapter	ZP□ T 06 B N – A5 – □	From p. 69	p. 115 p. 117	From p. 121
With buffer	ZP T 06 B N J 6 – B3 – A8	From p. 79	p. 116 p. 118	From p. 124

❶ ❷ ❸ ❹ ❺ ❻ ❼ ❽ ❾

• Bellows type

❶ Adapter (Lock ring) material

Nil	Brass
S∗1	Stainless steel (Stainless steel 304)

∗1 Only applicable to the pad unit (with lock ring) and the pad with adapter (Vacuum inlet direction: Vertical (Option "T"))

❷ Vacuum inlet direction

Nil	Pad unit
T	Vertical
R	Lateral (With One-touch fitting)
Y	Lateral (With barb fitting)

❸ Pad diameter

06	ø6	**20**	ø20
08	ø8	**25**	ø25
10	ø10	**32**	ø32
13	ø13	**40**	ø40
16	ø16	**50**	ø50

❹ Material

N	NBR
S	Silicone rubber∗1 ∗2
U	Urethane rubber
F	FKM
GN	Conductive NBR
GS	Conductive silicone rubber

∗1 Uses a material compliant with a dissolution test of the FDA (U.S. Food and Drug Administration) regulation 21CFR§177.2600 for "Rubber articles intended for repeated use."

∗2 Uses a material compliant with the standards for "Rubber apparatus (excluding baby drinking apparatus) and containers/packaging" (D3) (Partial revision: Japanese Ministry of Health, Labour, and Welfare Notification No. 595, 2012) in Section 3 "Apparatus and Containers/Packaging" of the Japan Food Sanitation Act, Article 18 "Specifications and Standards for Food and Food Additives, etc." (Japanese Ministry of Health and Welfare Notification No. 370, 1959)

❺ Buffer specification

J	Rotating
K	Non-rotating
JN∗1	Rotating (Without buffer plate)
KN∗1	Non-rotating (Without buffer plate)

∗1 Only for pad diameters ø6 and ø8

❻ Buffer stroke

Stroke [mm]	Pad diameter [mm] ø6	ø8	ø10	ø13	ø16	ø20	ø25	ø32	ø40	ø50
6	●	●	—	—	—	—	—	—	—	—
10	●	●	●	●	●	●	●	●	●	●
15	●	●	—	—	—	—	—	—	—	—
20	—	—	●	●	●	●	●	●	●	●
25	●	●	—	—	—	—	—	—	—	—
30	—	—	●	●	●	●	●	●	●	●
40	—	—	●	●	●	●	●	●	—	—
50	—	—	●	●	●	●	●	●	●	●

With adapter

❼ Vacuum inlet

○: ZP□T/Vertical ●: ZPR/Lateral (With One-touch fitting) △: ZPY/Lateral (With barb fitting)

Type	Symbol	Size	Pad diameter [mm] ø6, ø8	ø10 to ø16	ø20 to ø32	ø40, ø50
Male thread	**A5**	M5 x 0.8	○∗1	—	—	—
	AS5		—	○∗1	○∗1	—
	A6	M6 x 1	○∗1	—	—	—
	AS6		—	○∗1	○∗1	○∗1
	AG01	G1/8	—	○∗1	○∗1	—
	AG02	G1/4	—	—	—	○∗1
Female thread	**Nil**	M3 x 0.5	—	○ (❽Connection thread: A5/A6)	○ (❽Connection thread: A6)	○ (❽Connection thread: A6)
		M5 x 0.8	—	—	○ (❽Connection thread: A8)	○ (❽Connection thread: A8)
	B4	M4 x 0.7	○∗1	—	—	—
	B5	M5 x 0.8	○∗1	○∗1	○∗1	—
	B6	M6 x 1	—	○∗1	○∗1	○∗1
	B8	M8 x 1.25	—	—	○∗1	○∗1
	BG01	G1/8	—	○∗1	○∗1	—
	BG02	G1/4	—	—	—	○∗1
	B01	Rc1/8	—	○∗1	○∗1	○∗1
	N01∗4	NPT1/8	—	○∗1	○∗1	○∗1
	T01∗4	NPTF1/8	—	○∗1	○∗1	○∗1
One-touch fitting	**04**	ø4	●	●	●	—
	06	ø6	●	●	●	●
	08	ø8	—	—	●	●
Barb fitting	**N4**	For ø4 nylon tubing∗2	△	△	△	—
	N6	For ø6 nylon tubing∗2	△	△	△	△
	U4	For ø4 soft tubing∗3	△	△	△	—
	U6	For ø6 soft tubing∗3	△	△	△	△

∗1 Use the connection thread. ∗2 Nylon tube piping ∗3 Soft nylon/Polyurethane tube piping
∗4 Not compatible with stainless steel materials

❽ Connection thread

○: ZP□T/Vertical ●: ZPR/Lateral (With One-touch fitting) △: ZPY/Lateral (With barb fitting)

Type	Symbol	Size	Pad diameter [mm] ø6, ø8	ø10 to ø16	ø20 to ø32	ø40, ø50
Male thread∗1	**A5**	M5 x 0.8	●△	○∗2●△	—	—
	A6	M6 x 1	●△	○∗2●△	○∗2●△	○∗2●△
	A8	M8 x 1	—	—	○∗2●△	○∗2●△
Female thread	**B4**	M4 x 0.7	●△	—	—	—
	B5	M5 x 0.8	●△	●△	●△	—
	B6	M6 x 1	—	●△	●△	●△
	B8	M8 x 1.25	—	—	●△	●△

∗1 The mounting nut is shipped together with the product (unassembled). ∗2 ○: ZP□T/Vertical comes with a vacuum inlet (female thread).

With buffer

❼ Vacuum inlet

○: ZPT/Vertical ●: ZPR/Lateral (With One-touch fitting) △: ZPY/Lateral (With barb fitting)

Type	Symbol	Size	Pad diameter [mm] ø6, ø8	ø10 to ø16	ø20 to ø32	ø40, ø50
Female thread	**B3**	M3 x 0.5	○	—	—	—
	B5	M5 x 0.8	○	○	○	○
	B01	Rc1/8	—	—	—	○
	N01	NPT1/8	—	—	—	○
	T01	NPTF1/8	—	—	—	○
One-touch fitting	**04**	ø4	○●	○●	○●	—
	06	ø6	○●	○●	○●	○●
	08	ø8	—	—	●	○●
Barb fitting	**N4**	For ø4 nylon tubing∗1	○△	△	△	—
	N6	For ø6 nylon tubing∗1	△	○△	○△	○△
	U4	For ø4 soft tubing∗2	○△	△	△	—
	U6	For ø6 soft tubing∗2	△	○△	○△	○△

∗1 Nylon tube piping ∗2 Soft nylon/Polyurethane tube piping

❽ Connection thread

○: ZPT/Vertical ●: ZPR/Lateral (With One-touch fitting) △: ZPY/Lateral (With barb fitting)

Type	Symbol	Size	Pad diameter [mm] ø6, ø8	ø10 to ø16	ø20 to ø32	ø40, ø50
Male thread∗1	**A8**	M8 x 1	○●△	—	—	—
	A10	M10 x 1	—	○●△	○●△	—
	A14	M14 x 1	—	—	—	○●△

∗1 The mounting nut, buffer plate, and ○: ZPT/Vertical buffer are shipped together with the product (unassembled).

❾ Lock ring

Symbol	Pad diameter [mm] ø6, ø8	ø10 to ø50
Nil	None∗1	With lock ring
X19		Without lock ring

∗1 The lock ring cannot be used for pad diameters ø6 and ø8.

Lock ring unit

Part no.	Pad diameter [mm]
ZP□L1	ø10 to ø16
ZP□L2	ø20 to ø32
ZP□L3	ø40, ø50

□: Nil/Brass S/Stainless steel

∗ The pad unit lock ring is shipped together with the product (unassembled).

Dimensions/Models

Single unit ø6 to ø8

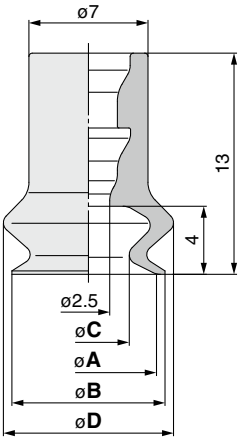

Construction p. 115
Mounting Bracket Assembly From p. 121

ZP 06 B N
❶ ❷

Model				A	B	C	D
	❶ Pad dia.	Form	❷ *1 Material				
ZP	06	B	N S U F GN GS	6	7	3.4	9
	08			8	9	4.8	10

*1 N: NBR, S: Silicone rubber, U: Urethane rubber, F: FKM, GN: Conductive NBR, GS: Conductive silicone rubber

Single unit ø10 to ø50

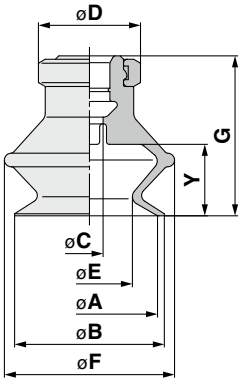

Construction p. 117
Mounting Bracket Assembly From p. 121

ZP □ 10 B N
❶ ❷ ❸

❶ Lock ring material

Nil	Brass
S	Stainless steel (Stainless steel 304)

Model					A	B	C	D	E	F	G	Y
	❶ Lock ring material	❷ Pad dia.	Form	❸ *1 Material								
ZP	Nil S	10	B	N S U F GN GS	10	12	4	13	5.5	13.5	16	5.5
		13			13	15			8.7	19	18.5	7.5
		16			16	18			10	21	20	8.5
		20			20	22		15	12.6	25	23.5	10.5
		25			25	27			16	28	24	
		32			32	34			18.9	37	29	14
		40			40	43	7	18	24.4	47	34	16
		50			50	53			33.4	57	38	19

*1 N: NBR, S: Silicone rubber, U: Urethane rubber, F: FKM, GN: Conductive NBR, GS: Conductive silicone rubber

Dimensions/Models

With adapter ø6 to ø8

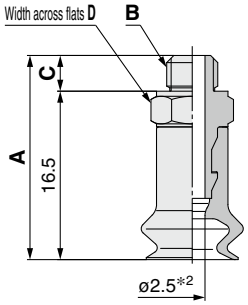

Construction	p. 115
Adapter Assembly	p. 121

ZP □ T 06 B N - A5
❶ ❷ ❸ ❹

❶ Adapter material

Nil	Brass
S	Stainless steel (Stainless steel 304)

❹ Vacuum inlet (Male thread)

A5	M5 x 0.8
A6	M6 x 1

Model							A	B	C	D
	❶ Adapter material	Vacuum inlet direction	❷ Pad dia.	Form	❸ Material *1	❹ Vacuum inlet				
ZP	Nil S	T	06 08	B	N S U F GN GS	A5	20	M5 x 0.8	3.5	7
						A6	21	M6 x 1	4.5	8

*1 N: NBR, S: Silicone rubber, U: Urethane rubber, F: FKM, GN: Conductive NBR, GS: Conductive silicone rubber
*2 Indicates the minimum hole size of the adapter or vacuum pad

With adapter ø10 to ø50

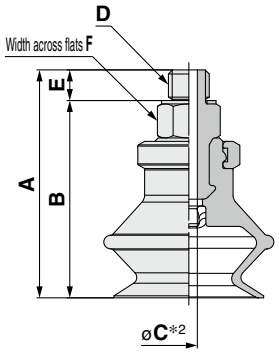

Construction	p. 117
Adapter Assembly	p. 121

ZP □ T 10 B N - AS5
❶ ❷ ❸ ❹

❶ Adapter (Lock ring) material

Nil	Brass
S	Stainless steel (Stainless steel 304)

❹ Vacuum inlet (Male thread)

AS5	M5 x 0.8
AS6	M6 x 1
AG01	G1/8
AG02	G1/4

Model							A	B	C*2	D	E	F
	❶ Adapter material	Vacuum inlet direction	❷ Pad dia.	Form	❸ Material *1	❹ Vacuum inlet						
ZP	Nil S	T	10	B	N S U F GN GS	AS5	25	21.5	2.5	M5 x 0.8	3.5	8
			13				27.5	24				
			16				29	25.5				
			20				32.5	29				
			25				33	29.5				
			32				38	34.5				
			10			AS6	26	21.5	2.5	M6 x 1	4.5	8
			13				28.5	24				
			16				30	25.5				
			20				33.5	29				
			25				34	29.5				
			32				39	34.5				
			40				45	40.5				12
			50				49	44.5				
			10			AG01	34	28.5	2.5	G1/8	5.5	17
			13				36.5	31				
			16				38	32.5				
			20				41.5	36	4			
			25				42	36.5				
			32				47	41.5				
			40			AG02	54.5	48	7	G1/4	6.5	21
			50				58.5	52				

*1 N: NBR, S: Silicone rubber, U: Urethane rubber, F: FKM, GN: Conductive NBR, GS: Conductive silicone rubber
*2 Indicates the minimum hole size of the adapter or vacuum pad

Dimensions/Models

With adapter ø10 to ø50

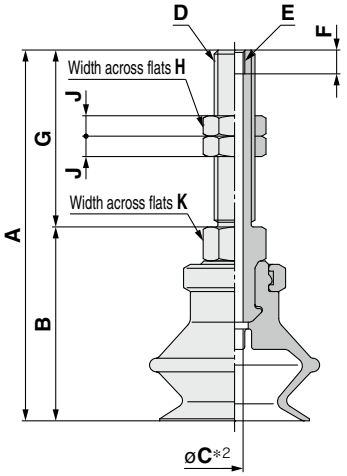

Construction p. 117
Adapter Assembly p. 121

ZP □ T 10 B N - A5
❶ ❷ ❸ ❹

❶ Adapter (Lock ring) material

Nil	Brass
S	Stainless steel (Stainless steel 304)

❹ Connection thread (Male thread)

A5	M5 x 0.8 (M3 x 0.5 With female thread)
A6	M6 x 1 (M3 x 0.5 With female thread)
A8	M8 x 1 (M5 x 0.8 With female thread)

Model							A	B	C*2	D	E	F	G	H	J	K
	❶ Adapter material	Vacuum inlet direction	❷ Pad dia.	Form	❸ Material *1	❹ Connection thread										
ZP	Nil S	T	10	B	N S U F GN GS	A5	42	21	2.5	M5 x 0.8	M3 x 0.5	3.5	21	8	4	8
			13				44.5	23.5								
			16				46	25								
			10			A6	47	21	2.5	M6 x 1	M3 x 0.5	3.5	26	8	4	8
			13				49.5	23.5								
			16				51	25								
			20				54.5	28.5								
			25				55	29								
			32				60	34								
			40				66	40								12
			50				70	44								
			20			A8	49.5	33.5	4	M8 x 1	M5 x 0.8	5	16	12	4	12
			25				50	34								
			32				55	39								
			40				56	40	4.2							
			50				60	44								

*1 N: NBR, S: Silicone rubber, U: Urethane rubber, F: FKM, GN: Conductive NBR, GS: Conductive silicone rubber
*2 Indicates the minimum hole size of the adapter or vacuum pad

Dimensions/Models

With adapter ø6 to ø8

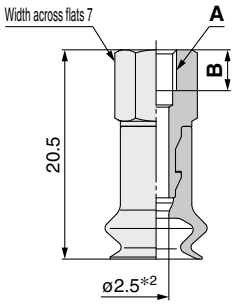

Construction p. 115
Adapter Assembly p. 121

ZP □ T 06 B N - B4
❶ ❷ ❸ ❹

❶ Adapter material

Nil	Brass
S	Stainless steel (Stainless steel 304)

❹ Vacuum inlet (Female thread)

B4	M4 x 0.7
B5	M5 x 0.8

Model							A	B
	❶ Adapter material	Vacuum inlet direction	❷ Pad dia.	Form	❸ Material *1	❹ Vacuum inlet		
ZP	Nil S	T	06 08	B	N S U F GN GS	B4	M4 x 0.7	4
						B5	M5 x 0.8	5

*1 N: NBR, S: Silicone rubber, U: Urethane rubber, F: FKM, GN: Conductive NBR, GS: Conductive silicone rubber
*2 Indicates the minimum hole size of the adapter or vacuum pad

With adapter ø10 to ø50

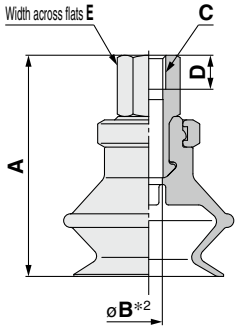

Construction p. 117
Adapter Assembly p. 121

ZP □ T 10 B N - B5
❶ ❷ ❸ ❹

❶ Adapter (Lock ring) material

Nil	Brass
S	Stainless steel (Stainless steel 304)

❹ Vacuum inlet (Female thread)

B5	M5 x 0.8	BG02	G1/4
B6	M6 x 1	B01	Rc1/8
B8	M8 x 1.25	N01*1	NPT1/8
BG01	G1/8	T01*1	NPTF1/8

*1 Not compatible with stainless steel materials

Model							A	B*2	C	D	E
	❶ Adapter material	Vacuum inlet direction	❷ Pad dia.	Form	❸ Material *1	❹ Vacuum inlet					
ZP	Nil S	T	10	B	N S U F GN GS	B5	25	2.5	M5 x 0.8	5	8
			13				27.5				
			16				29				
			20				32.5	4			
			25				33				
			32				38				
			10			B6	25	2.5	M6 x 1	6	8
			13				27.5				
			16				29				
			20				32.5	4			
			25				33				
			32				38				
			40				47.5	4.9			12
			50				51.5				
			20			B8	38.5	3.5	M8 x 1.25	8	12
			25				39				
			32				44				
			40				47.5	6.6			
			50				51.5				
			10			BG01	31	2.5	G1/8	7.4	14
			13				33.5				
			16				35				
			20				38.5	4			
			25				39				
			32				44				
			40			BG02	53.5	7	G1/4	11	17
			50				57.5				
			10			B01 N01*3 T01*3	31	2.5	Rc1/8 NPT1/8 NPTF1/8	—	12
			13				33.5				
			16				35				
			20				38.5	3.5			
			25				39				
			32				44				
			40				47.5	7			
			50				51.5				

*1 N: NBR, S: Silicone rubber, U: Urethane rubber, F: FKM, GN: Conductive NBR, GS: Conductive silicone rubber
*2 Indicates the minimum hole size of the adapter or vacuum pad
*3 Not compatible with stainless steel materials

Dimensions/Models

With adapter/One-touch fitting ø6 to ø8

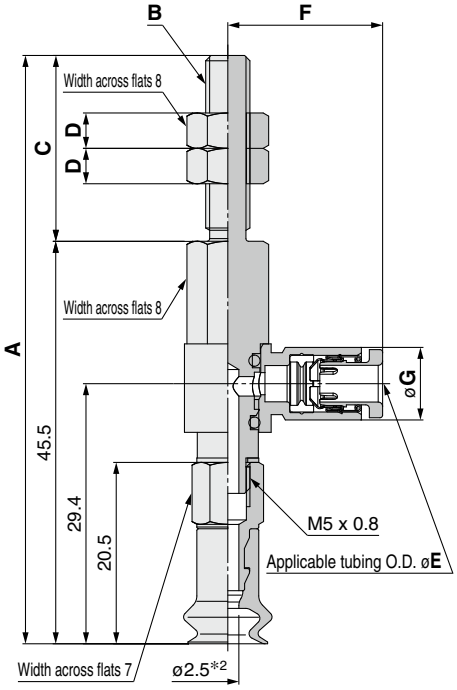

Construction p. 115
Adapter Assembly p. 122

ZPR 06 B N - 04 - A5

❶ ❷ ❸ ❹

❸ Vacuum inlet (One-touch fitting)

04	ø4
06	ø6

❹ Connection thread (Male thread)

A5	M5 x 0.8
A6	M6 x 1

Model							A	B	C	D
	Vacuum inlet direction	❶ Pad dia.	Form	❷ Material *1	❸ Vacuum inlet	❹ Connection thread				
ZP	R	06 08	B	N S U F GN GS	04 06	A5	66.5	M5 x 0.8	21	4
						A6	71.5	M6 x 1	26	4

Dimensions Per Vacuum Inlet

Model							E	F	G	Fitting part min. hole size
	Vacuum inlet direction	❶ Pad dia.	Form	❷ Material *1	❸ Vacuum inlet	❹ Connection thread				
ZP	R	06 08	B	N S U F GN GS	04	A5 A6	4	17.5	8.2	ø2.5
					06		6	18.3	10.4	ø4

*1 N: NBR, S: Silicone rubber, U: Urethane rubber, F: FKM, GN: Conductive NBR, GS: Conductive silicone rubber
*2 Indicates the minimum hole size of the adapter or vacuum pad

Dimensions/Models

With adapter/One-touch fitting ø10 to ø50

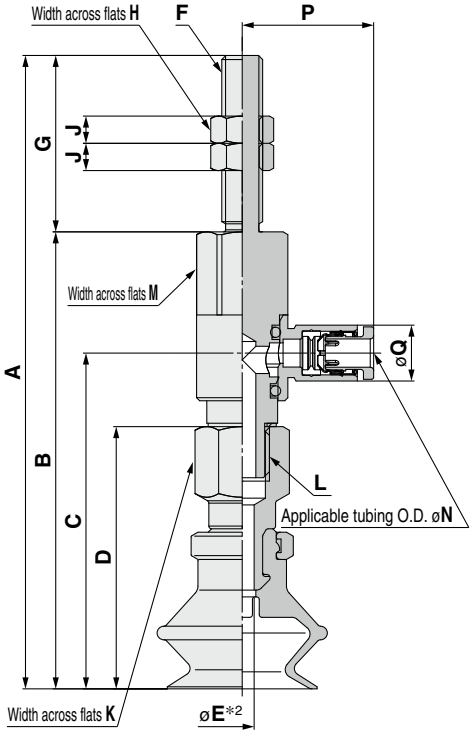

Construction p. 117
Adapter Assembly p. 122

ZPR 10 B N - 04 - A5

❶ ❷ ❸ ❹

❸ **Vacuum inlet (One-touch fitting)**

04	ø4
06	ø6
08	ø8

❹ **Connection thread (Male thread)**

A5	M5 x 0.8
A6	M6 x 1
A8	M8 x 1

Model							A	B	C	D	*2 E	F	G	H	J	K	L
	Vacuum inlet direction	❶ Pad dia.	Form	❷ Material *1	❸ Vacuum inlet	❹ Connection thread											
ZP	R	10	B	N S U F GN GS	04 06 08	A5	71	50	33.9	25	2.5	M5 x 0.8	21	8	4	8	M5 x 0.8
		13					73.5	52.5	36.4	27.5							
		16					75	54	37.9	29							
		10				A6	76	50	33.9	25	2.5	M6 x 1	26	8	4	8	M5 x 0.8
		13					78.5	52.5	36.4	27.5							
		16					80	54	37.9	29							
		20					93	67.1	49.3	38.5	3.5		25.9			12	M8 x 1.25
		25					93.5	67.6	49.8	39							
		32					98.5	72.6	54.8	44							
		40					102	76.1	58.3	47.5	4						
		50					106	80.1	62.3	51.5							
		20				A8	83	67.1	49.3	38.5	3.5	M8 x 1	15.9	12	4	12	M8 x 1.25
		25					83.5	67.6	49.8	39							
		32					88.5	72.6	54.8	44							
		40					92	76.1	58.3	47.5	4						
		50					96	80.1	62.3	51.5							

Dimensions Per Vacuum Inlet

Model							M	N	P	Q	Fitting part min. hole size
	Vacuum inlet direction	❶ Pad dia.	Form	❷ Material *1	❸ Vacuum inlet	❹ Connection thread					
ZP	R	10 13 16	B	N S U F GN GS	04	A5 A6	8	4	17.5	8.2	ø2.5
					06			6	18.3	10.4	ø4
		20 25 32			04	A6 A8	12	4	19.3	8.2	ø3
					06			6	20.5	10.4	ø4.5
					08		16	8	23.5	13.2	ø6
		40 50			06	A6 A8	12	6	20.5	10.4	ø4.5
					08		16	8	23.5	13.2	ø6

*1 N: NBR, S: Silicone rubber, U: Urethane rubber, F: FKM, GN: Conductive NBR, GS: Conductive silicone rubber

*2 Indicates the minimum hole size of the adapter or vacuum pad

Dimensions/Models

With adapter/One-touch fitting ø6 to ø8

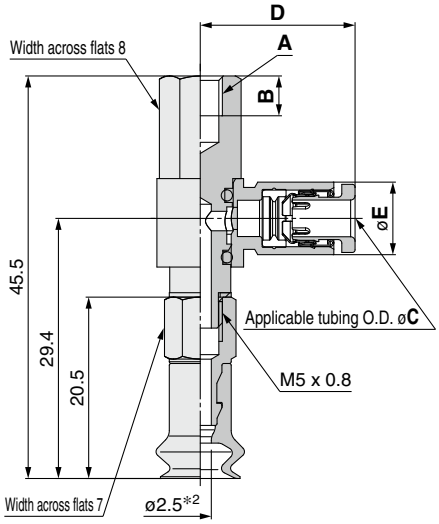

Construction p. 115
Adapter Assembly p. 122

ZPR 06 B N - 04 - B4

❶ ❷ ❸ ❹

❸ Vacuum inlet (One-touch fitting)

04	ø4
06	ø6

❹ Connection thread (Female thread)

B4	M4 x 0.7
B5	M5 x 0.8

Model							A	B
	Vacuum inlet direction	❶ Pad dia.	Form	❷ Material *1	❸ Vacuum inlet	❹ Connection thread		
ZP	R	06 08	B	N S U F GN GS	04 06	B4	M4 x 0.7	4.5
						B5	M5 x 0.8	5.5

Dimensions Per Vacuum Inlet

Model							C	D	E	Fitting part min. hole size
	Vacuum inlet direction	❶ Pad dia.	Form	❷ Material *1	❸ Vacuum inlet	❹ Connection thread				
ZP	R	06 08	B	N S U F GN GS	04	B4 B5	4	17.5	8.2	ø2.5
					06		6	18.3	10.4	ø4

*1 N: NBR, S: Silicone rubber, U: Urethane rubber, F: FKM, GN: Conductive NBR, GS: Conductive silicone rubber
*2 Indicates the minimum hole size of the adapter or vacuum pad

Dimensions/Models

With adapter/One-touch fitting ø10 to ø50

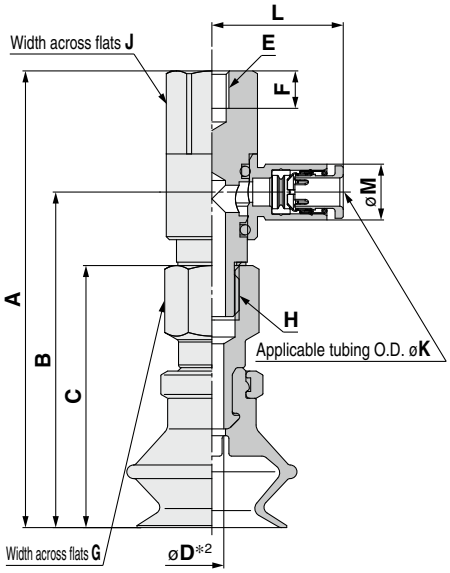

Construction p. 117
Adapter Assembly p. 122

ZPR 10 B N - 04 - B5
❶ ❷ ❸ ❹

❸ Vacuum inlet (One-touch fitting)

04	ø4
06	ø6
08	ø8

❹ Connection thread (Female thread)

B5	M5 x 0.8
B6	M6 x 1
B8	M8 x 1.25

Model							A	B	C	D*2	E	F	G	H
	Vacuum inlet direction	❶ Pad dia.	Form	❷ Material *1	❸ Vacuum inlet	❹ Connection thread								
ZP	R	10	B	N S U F GN GS	04 06 08	B5	50	33.9	25	2.5	M5 x 0.8	5.5	8	M5 x 0.8
		13					52.5	36.4	27.5					
		16					54	37.9	29					
		20					67.1	49.3	38.5	3.5			12	M8 x 1.25
		25					67.6	49.8	39					
		32					72.6	54.8	44					
		10				B6	50	33.9	25	2.5	M6 x 1	6.5	8	M5 x 0.8
		13					52.5	36.4	27.5					
		16					54	37.9	29					
		20					67.1	49.3	38.5	3.5			12	M8 x 1.25
		25					67.6	49.8	39					
		32					72.6	54.8	44					
		40					76.1	58.3	47.5	4				
		50					80.1	62.3	51.5					
		20				B8	67.1	49.3	38.5	3.5	M8 x 1.25	8.5	12	M8 x 1.25
		25					67.6	49.8	39					
		32					72.6	54.8	44					
		40					76.1	58.3	47.5	4				
		50					80.1	62.3	51.5					

Dimensions Per Vacuum Inlet

Model							J	K	L	M	Fitting part min. hole size
	Vacuum inlet direction	❶ Pad dia.	Form	❷ Material *1	❸ Vacuum inlet	❹ Connection thread					
ZP	R	10 13 16	B	N S U F GN GS	04	B5 B6	8	4	17.5	8.2	ø2.5
					06			6	18.3	10.4	ø4
		20 25 32			04	B5 B6 B8	12	4	19.3	8.2	ø3
					06			6	20.5	10.4	ø4.5
					08		16	8	23.5	13.2	ø6
		40 50			06	B6 B8	12	6	20.5	10.4	ø4.5
					08		16	8	23.5	13.2	ø6

*1 N: NBR, S: Silicone rubber, U: Urethane rubber, F: FKM, GN: Conductive NBR, GS: Conductive silicone rubber
*2 Indicates the minimum hole size of the adapter or vacuum pad

Dimensions/Models

With adapter/barb fitting ø6 to ø8

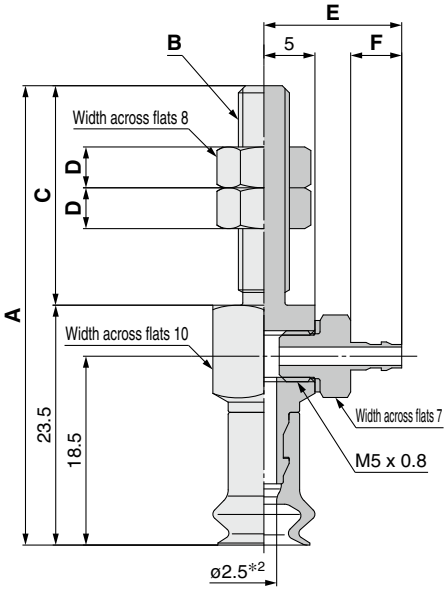

Construction p. 115
Adapter Assembly p. 123

ZPY 06 B N - N4 - A5

❶ ❷ ❸ ❹

❹ Connection thread (Male thread)

A5	M5 x 0.8
A6	M6 x 1

Vacuum inlet ❸ (Barb fitting)

N4	For ø4 nylon tubing	M-5AN-4
N6	For ø6 nylon tubing	M-5AN-6
U4	For ø4 soft tubing	M-5AU-4
U6	For ø6 soft tubing	M-5AU-6

Model							A	B	C	D
	Vacuum inlet direction	❶ Pad dia.	Form	❷ Material *1	❸ Vacuum inlet	❹ Connection thread				
ZP	Y	06 08	B	N S U F GN GS	N4 N6 U4 U6	A5	45	M5 x 0.8	21.5	4
						A6	50.5	M6 x 1	27	4

Dimensions Per Vacuum Inlet

Model							E	F	Fitting part min. hole size
	Vacuum inlet direction	❶ Pad dia.	Form	❷ Material *1	❸ Vacuum inlet	❹ Connection thread			
ZP	Y	06 08	B	N S U F GN GS	N4 U4	A5 A6	13.5	5	ø1.8
					N6 U6		15.5	7	ø2.5

*1 N: NBR, S: Silicone rubber, U: Urethane rubber, F: FKM, GN: Conductive NBR, GS: Conductive silicone rubber
*2 Indicates the minimum hole size of the adapter or vacuum pad

Dimensions/Models

With adapter/barb fitting ø10 to ø50

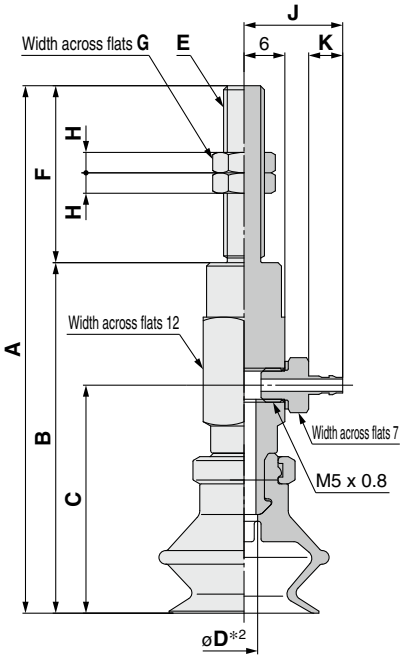

Construction p. 117
Adapter Assembly p. 123

ZPY 10 B N - N4 - A5

❶ ❷ ❸ ❹

❸ Vacuum inlet (Barb fitting)

N4	For ø4 nylon tubing	M-5AN-4
N6	For ø6 nylon tubing	M-5AN-6
U4	For ø4 soft tubing	M-5AU-4
U6	For ø6 soft tubing	M-5AU-6

❹ Connection thread (Male thread)

A5	M5 x 0.8
A6	M6 x 1
A8	M8 x 1

Model							A	B	C	D*2	E	F	G	H
	Vacuum inlet direction	❶ Pad dia.	Form	❷ Material*1	❸ Vacuum inlet	❹ Connection thread								
ZP	Y	10	B	N S U F GN GS	N4 N6 U4 U6	A5	63	42	26	2.5	M5 x 0.8	21	8	4
		13					65.5	44.5	28.5					
		16					67	46	30					
		10				A6	68	42	26	2.5	M6 x 1	26	8	4
		13					70.5	44.5	28.5					
		16					72	46	30					
		20					77.5	51.5	33.5	3.5				
		25					78	52	34					
		32					83	57	39					
		40					88	62	44	6				
		50					92	66	48					
		20				A8	67.5	51.5	33.5	3.5	M8 x 1	16	12	4
		25					68	52	34					
		32					73	57	39					
		40					78	62	44	6				
		50					82	66	48					

Dimensions Per Vacuum Inlet

Model							J	K	Fitting part min. hole size
	Vacuum inlet direction	❶ Pad dia.	Form	❷ Material*1	❸ Vacuum inlet	❹ Connection thread			
ZP	Y	10 13 16 20 25 32	B	N S U F GN GS	N4 U4	A5 A6	14.5	5	ø1.8
					N6 U6		16.5	7	ø2.5
		40 50			N6 U6	A6 A8	16.5	7	ø2.5

*1 N: NBR, S: Silicone rubber, U: Urethane rubber, F: FKM, GN: Conductive NBR, GS: Conductive silicone rubber
*2 Indicates the minimum hole size of the adapter or vacuum pad

Dimensions/Models

With adapter/barb fitting ø6 to ø8

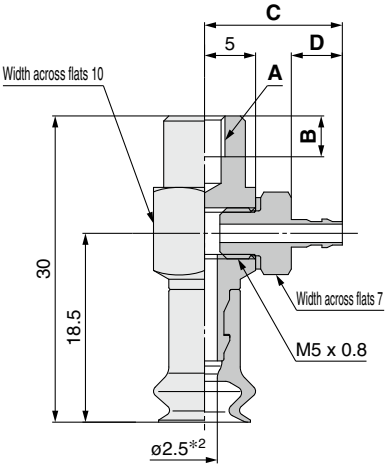

Construction p. 115
Adapter Assembly p. 123

ZPY 06 B N - N4 - B4
❶ ❷ ❸ ❹

❸ **Vacuum inlet (Barb fitting)**

N4	For ø4 nylon tubing	M-5AN-4
N6	For ø6 nylon tubing	M-5AN-6
U4	For ø4 soft tubing	M-5AU-4
U6	For ø6 soft tubing	M-5AU-6

❹ **Connection thread (Female thread)**

B4	M4 x 0.7
B5	M5 x 0.8

Model							A	B
	Vacuum inlet direction	❶ Pad dia.	Form	❷ Material *1	❸ Vacuum inlet	❹ Connection thread		
ZP	Y	06 08	B	N S U F GN GS	N4 N6 U4 U6	B4	M4 x 0.7	4
						B5	M5 x 0.8	5

Dimensions Per Vacuum Inlet

Model							C	D	Fitting part min. hole size
	Vacuum inlet direction	❶ Pad dia.	Form	❷ Material *1	❸ Vacuum inlet	❹ Connection thread			
ZP	Y	06 08	B	N S U F GN GS	N4 U4	B4 B5	13.5	5	ø1.8
					N6 U6		15.5	7	ø2.5

*1 N: NBR, S: Silicone rubber, U: Urethane rubber, F: FKM, GN: Conductive NBR, GS: Conductive silicone rubber
*2 Indicates the minimum hole size of the adapter or vacuum pad

Dimensions/Models

With adapter/barb fitting ø10 to ø50

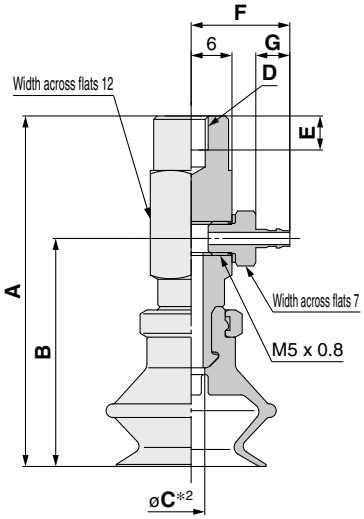

Construction p. 117
Adapter Assembly p. 123

ZPY 10 B N - N4 - B5

❶ ❷ ❸ ❹

❸ Vacuum inlet (Barb fitting)

N4	For ø4 nylon tubing	M-5AN-4
N6	For ø6 nylon tubing	M-5AN-6
U4	For ø4 soft tubing	M-5AU-4
U6	For ø6 soft tubing	M-5AU-6

❹ Connection thread (Female thread)

B5	M5 x 0.8
B6	M6 x 1
B8	M8 x 1.25

Model							A	B	C*2	D	E
	Vacuum inlet direction	❶ Pad dia.	Form	❷ Material *1	❸ Vacuum inlet	❹ Connection thread					
ZP	Y	10	B	N S U F GN GS	N4 N6 U4 U6	B5	42	26	2.5	M5 x 0.8	5
		13					44.5	28.5			
		16					46	30			
		20					51.5	33.5	3.5		
		25					52	34			
		32					57	39			
		10				B6	42	26	2.5	M6 x 1	6
		13					44.5	28.5			
		16					46	30			
		20					51.5	33.5	3.5		
		25					52	34			
		32					57	39			
		40					62	44	6		
		50					66	48			
		20				B8	51.5	33.5	3.5	M8 x 1.25	8
		25					52	34			
		32					57	39			
		40					62	44	6		
		50					66	48			

Dimensions Per Vacuum Inlet

Model							F	G	Fitting part min. hole size
	Vacuum inlet direction	❶ Pad dia.	Form	❷ Material *1	❸ Vacuum inlet	❹ Connection thread			
ZP	Y	10 13 16	B	N S U F GN GS	N4 U4	B4 B5	14.5	5	ø1.8
					N6 U6		16.5	7	ø2.5
		20 25 32			N4 U4	B5 B6 B8	14.5	5	ø1.8
					N6 U6		16.5	7	ø2.5
		40 50			N6 U6	B6 B8	16.5	7	ø2.5

*1 N: NBR, S: Silicone rubber, U: Urethane rubber, F: FKM, GN: Conductive NBR, GS: Conductive silicone rubber
*2 Indicates the minimum hole size of the adapter or vacuum pad

Dimensions/Models

With buffer ø6 to ø8

The drawings show the type with a buffer plate.

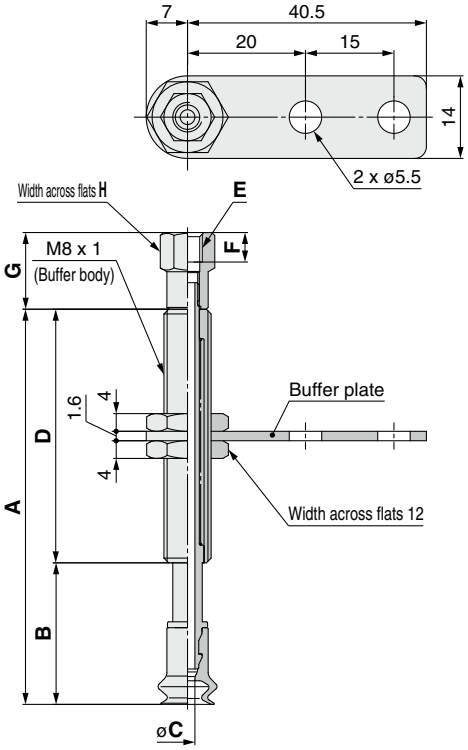

Vacuum inlet: One-touch fitting

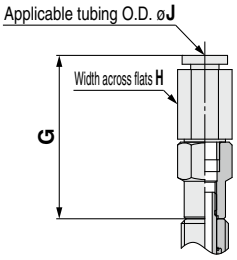

Vacuum inlet: Barb fitting

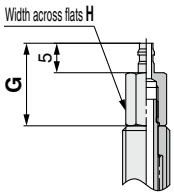

Construction	p. 116
Buffer Assembly	p. 124

ZPT 06 B N J 6 - B3 - A8

❶ ❷ ❸ ❹ ❺ ❻

❸ Buffer specification

J	Rotating
K	Non-rotating
JN	Rotating (Without buffer plate)
KN	Non-rotating (Without buffer plate)

❻ Connection thread (Male thread)

A8	M8 x 1

❺ Vacuum inlet

B3	M3 x 0.5	Female thread	
B5	M5 x 0.8		
04	ø4	One-touch fitting	KQ2H04-M5N
06	ø6		KQ2H06-M5N
N4	For ø4 nylon tubing	Barb fitting	
U4	For ø4 soft tubing		

Model									A	B	C*2	D
	Vacuum inlet direction	❶ Pad dia.	Form	❷ Material*1	❸ Buffer spec.	❹ Buffer stroke	❺ Vacuum inlet	❻ Connection thread				
ZP	T	06 08	B	N S U F GN GS	J K JN KN	6	B3 B5 04 06 N4 U4	A8	34	19	J: 2.5 K: 2	15
						10			67	24		43
						15			72	29		
						25			82	39		

Dimensions Per Vacuum Inlet: Female Thread

Model									E	F	G	H
	Vacuum inlet direction	❶ Pad dia.	Form	❷ Material*1	❸ Buffer spec.	❹ Buffer stroke	❺ Vacuum inlet	❻ Connection thread				
ZP	T	06 08	B	N S U F GN GS	J K JN KN	6 10 15 25	B3	A8	M3 x 0.5	3	11	6
							B5		M5 x 0.8	5	13	8

Dimensions Per Vacuum Inlet: One-touch Fitting

Model									G	H	J	Fitting part min. hole size
	Vacuum inlet direction	❶ Pad dia.	Form	❷ Material*1	❸ Buffer spec.	❹ Buffer stroke	❺ Vacuum inlet	❻ Connection thread				
ZP	T	06 08	B	N S U F GN GS	J K JN KN	6 10 15 25	04	A8	27.7	8	4	ø2.5
							06			10	6	

Dimensions Per Vacuum Inlet: Barb Fitting

Model									G	H	Fitting part min. hole size
	Vacuum inlet direction	❶ Pad dia.	Form	❷ Material*1	❸ Buffer spec.	❹ Buffer stroke	❺ Vacuum inlet	❻ Connection thread			
ZP	T	06 08	B	N S U F GN GS	J K JN KN	6 10 15 25	N4	A8	14	6	ø1.8
							U4				

*1 N: NBR, S: Silicone rubber, U: Urethane rubber, F: FKM, GN: Conductive NBR, GS: Conductive silicone rubber

*2 Indicates the minimum hole size of the adapter or vacuum pad

Dimensions/Models

With buffer ø10 to ø50

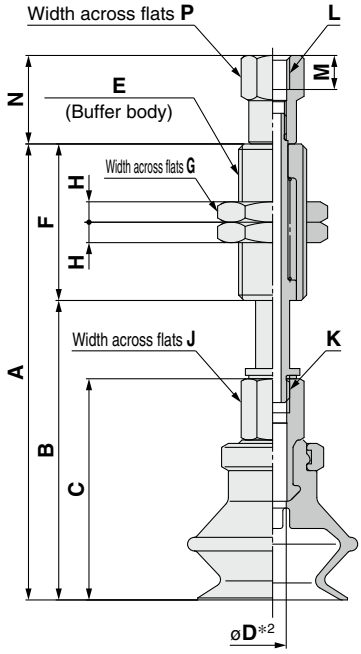

Construction p. 118
Buffer Assembly p. 124

ZPT 10 B N J 10 - B5 - A10

❶ ❷ ❸ ❹ ❺ ❻

❸ Buffer specification

J	Rotating
K	Non-rotating

❺ Vacuum inlet (Female thread)

B5	M5 x 0.8
B01	Rc1/8
N01	NPT1/8
T01	NPTF1/8

❻ Connection thread (Male thread)

A10	M10 x 1
A14	M14 x 1

Model									A	B	C	D*2	E	F	G	H	J	K
	Vacuum inlet direction	❶ Pad dia.	Form	❷ Material *1	❸ Buffer spec.	❹ Buffer stroke	❺ Vacuum inlet	❻ Connection thread										
ZP	T	10	B	N S U F GN GS	J K	10	B5 04 06 N6 U6	A10	59.5	36.5	25	J: 2.5 K: 2	M10 x 1	23	14	3	8	M5 x 0.8
						20			97.5	46.5				51				
						30			107.5	56.5								
						40			143.5	66.5				77				
						50			153.5	76.5								
		13				10			62	39	27.5			23				
						20			100	49				51				
						30			110	59								
						40			146	69				77				
						50			156	79								
		16				10			63.5	40.5	29			23				
						20			101.5	50.5				51				
						30			111.5	60.5								
						40			147.5	70.5				77				
						50			157.5	80.5								
		20				10			67	44	32.5			23				
						20			105	54				51				
						30			115	64								
						40			151	74				77				
						50			161	84								
		25				10			67.5	44.5	33			23				
						20			105.5	54.5				51				
						30			115.5	64.5								
						40			151.5	74.5				77				
						50			161.5	84.5								
		32				10			72.5	49.5	38			23				
						20			110.5	59.5				51				
						30			120.5	69.5								
						40			156.5	79.5				77				
						50			166.5	89.5								
		40				10	B5 06 08 N6 U6	A14	110	60	47.5	4	M14 x 1	50	19	4	12	M8 x 1.25
						20			120	70								
						30			130	80								
						50			175	100				75				
		50				10			114	64	51.5			50				
						20			124	74								
						30			134	84								
						50			179	104				75				

Dimensions Per Vacuum Inlet: Female Thread

Model									L	M	N	P
	Vacuum inlet direction	❶ Pad dia.	Form	❷ Material *1	❸ Buffer spec.	❹ Buffer stroke	❺ Vacuum inlet	❻ Connection thread				
ZP	T	10 13 16 20 25 32	B	N S U F GN GS	J K	10 20 30 40 50	B5	A10	M5 x 0.8	5	13	8
		40 50				10	B5	A14	M5 x 0.8	4.5	15	10
						20 30 50				5	9	
						10	B01 N01 T01		Rc1/8 NPT1/8 NPTF1/8	—	16.5	13
						20 30 50					12	

*1 N: NBR, S: Silicone rubber, U: Urethane rubber, F: FKM, GN: Conductive NBR, GS: Conductive silicone rubber
*2 Indicates the minimum hole size of the adapter or vacuum pad

Dimensions/Models

With buffer ø10 to ø50

ZPT 10 B N J 10 - 04 - A10

❶ ❷ ❹

Buffer specification ❸

J	Rotating
K	Non-rotating

❻ Connection thread (Male thread)

A10	M10 x 1
A14	M14 x 1

❺ Vacuum inlet

			Pad diameter ø10 to ø32	Pad diameter ø40, ø50 (10 st only)
04	ø4	One-touch fitting	KQ2H04-M5N	
06	ø6	One-touch fitting	KQ2H06-M5N	KQ2H06-01NS
08	ø8	One-touch fitting		KQ2H08-01NS
N6	For ø6 nylon tubing	Barb fitting		
U6	For ø6 soft tubing	Barb fitting		

Vacuum inlet: One-touch fitting

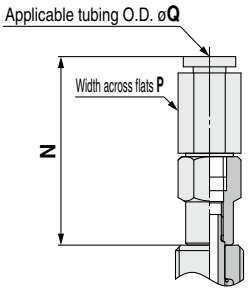

Vacuum inlet: Built-in One-touch fitting
Pad diameter: ø40, ø50 (Buffer stroke: 20 to 50 st)

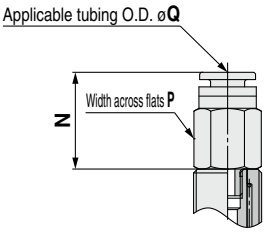

Vacuum inlet: Barb fitting

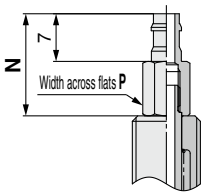

Dimensions Per Vacuum Inlet: One-touch Fitting

Model: Vacuum inlet direction	❶ Pad dia.	Form	❷ Material *1	❸ Buffer spec.	❹ Buffer stroke	❺ Vacuum inlet	❻ Connection thread	N	P	Q	Fitting part min. hole size
ZP T	10 13 16 20 25 32	B	N S U F GN GS	J K	10 20 30 40 50	04	A10	27.7	8	4	ø2.5
ZP T	10 13 16 20 25 32	B	N S U F GN GS	J K	10 20 30 40 50	06	A10	27.7	10	6	ø2.5
ZP T	40 50	B	N S U F GN GS	J K	10	06	A14	31.8	10	6	ø4.5
ZP T	40 50	B	N S U F GN GS	J K	10	08	A14	35.9	14	8	ø6
ZP T	40 50	B	N S U F GN GS	J K	20 30 50	06	A14	19.9	12	6	ø3
ZP T	40 50	B	N S U F GN GS	J K	20 30 50	08	A14	24.9	14	8	ø3

Dimensions Per Vacuum Inlet: Barb Fitting

Model: Vacuum inlet direction	❶ Pad dia.	Form	❷ Material *1	❸ Buffer spec.	❹ Buffer stroke	❺ Vacuum inlet	❻ Connection thread	N	P	Fitting part min. hole size
ZP T	10 13 16 20 25 32	B	N S U F GN GS	J K	10 20 30 40 50	N6	A10	15	6	ø2.5
ZP T	10 13 16 20 25 32	B	N S U F GN GS	J K	10 20 30 40 50	U6	A10	15	6	ø2.5
ZP T	40 50	B	N S U F GN GS	J K	10	N6	A14	19	10	ø2.5
ZP T	40 50	B	N S U F GN GS	J K	10	U6	A14	19	10	ø2.5
ZP T	40 50	B	N S U F GN GS	J K	20 30 50	N6	A14	12	10	ø2.5
ZP T	40 50	B	N S U F GN GS	J K	20 30 50	U6	A14	12	10	ø2.5

*1 N: NBR, S: Silicone rubber, U: Urethane rubber, F: FKM, GN: Conductive NBR, GS: Conductive silicone rubber

Construction p. 118
Buffer Assembly p. 124

Dimensions/Models

With buffer/One-touch fitting ø6 to ø8

The drawings show the type with a buffer plate.

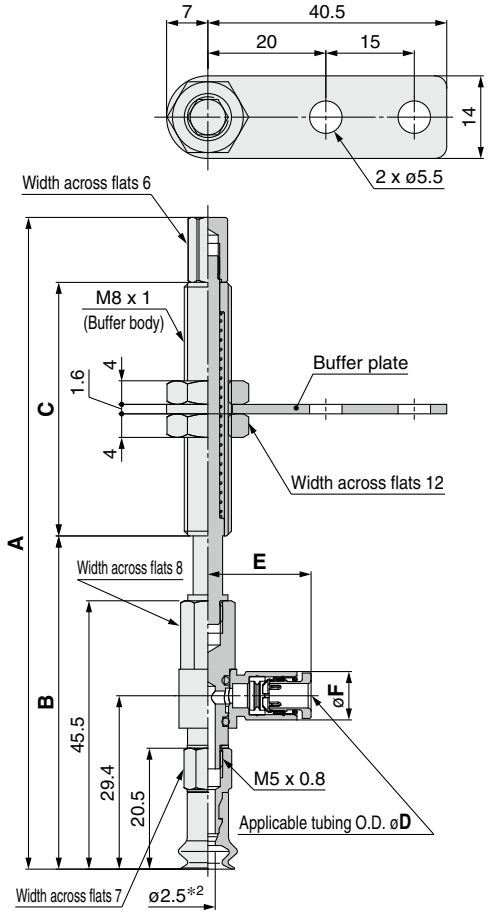

Construction p. 116
Buffer Assembly p. 125

ZPR 06 B N J 6 - 04 - A8

❶ ❷ ❸ ❹ ❺ ❻

❸ Buffer specification

J	Rotating
K	Non-rotating
JN	Rotating (Without buffer plate)
KN	Non-rotating (Without buffer plate)

❻ Connection thread (Male thread)

A8	M8 x 1

❺ Vacuum inlet (One-touch fitting)

04	ø4
06	ø6

Model									A	B	C
	Vacuum inlet direction	❶ Pad dia.	Form	❷ Material *1	❸ Buffer spec.	❹ Buffer stroke	❺ Vacuum inlet	❻ Connection thread			
ZP	R	06 08	B	N S U F GN GS	J K JN KN	6	04 06	A8	79.5	53.5	15
						10			110.5	56.5	43
						15			115.5	61.5	
						25			125.5	71.5	

Dimensions Per Vacuum Inlet

Model									D	E	F	Fitting part min. hole size
	Vacuum inlet direction	❶ Pad dia.	Form	❷ Material *1	❸ Buffer spec.	❹ Buffer stroke	❺ Vacuum inlet	❻ Connection thread				
ZP	R	06 08	B	N S U F GN GS	J K JN KN	6 10 15 25	04	A8	4	17.5	8.2	ø2.5
							06		6	18.3	10.4	ø4

*1 N: NBR, S: Silicone rubber, U: Urethane rubber, F: FKM, GN: Conductive NBR, GS: Conductive silicone rubber
*2 Indicates the minimum hole size of the adapter or vacuum pad

Dimensions/Models

With buffer/One-touch fitting ø10 to ø50

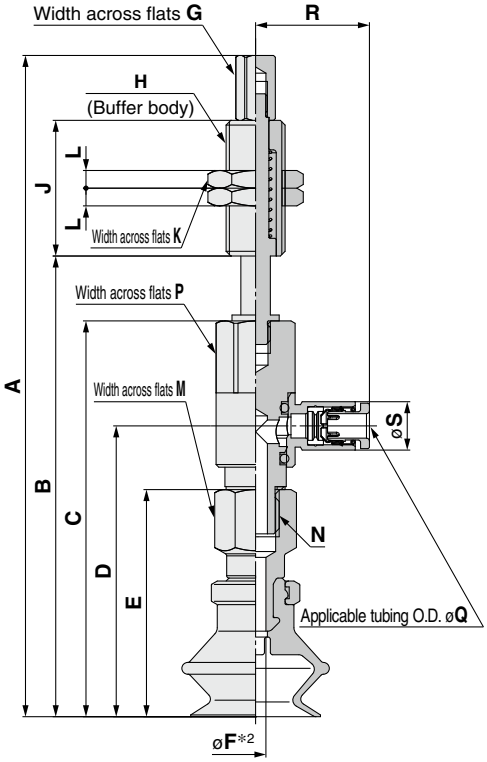

Construction	p. 118
Buffer Assembly	p. 125

ZPR 10 B N J 10 - 04 - A10

❶ ❷ ❹ ❺ ❻

Buffer specification ❸

J	Rotating
K	Non-rotating

❺ Vacuum inlet (One-touch fitting)

04	ø4
06	ø6
08	ø8

❻ Connection thread (Male thread)

A10	M10 x 1
A14	M14 x 1

Model									A	B	C	D	E	*2 F	G	H	J	K	L	M	N
	Vacuum inlet direction	❶ Pad dia.	Form	❷ *1 Material	❸ Buffer spec.	❹ Buffer stroke	❺ Vacuum inlet	❻ Connection thread													
ZP	R	10	B	N S U F GN GS	J K	10	04 06	A10	95	61	50	33.9	25	2.5	6	M10 x 1	23	14	3	8	M5 x 0.8
						20			133	71							51				
						30			143	81											
						40			179	91							77				
						50			189	101											
		13				10			97.5	63.5	52.5	36.4	27.5				23				
						20			135.5	73.5							51				
						30			145.5	83.5											
						40			181.5	93.5							77				
						50			191.5	103.5											
		16				10			99	65	54	37.9	29				23				
						20			137	75							51				
						30			147	85											
						40			183	95							77				
						50			193	105											
		20				10	04 06 08		112.1	78.1	67.1	49.3	38.5	3.5			23			12	M8 x 1.25
						20			150.1	88.1							51				
						30			160.1	98.1											
						40			196.1	108.1							77				
						50			206.1	118.1											
		25				10			112.6	78.6	67.6	49.8	39				23				
						20			150.6	88.6							51				
						30			160.6	98.6											
						40			196.6	108.6							77				
						50			206.6	118.6											
		32				10			117.6	83.6	72.6	54.8	44				23				
						20			155.6	93.6							51				
						30			165.6	103.6											
						40			201.6	113.6							77				
						50			211.6	123.6											
		40				10	06 08	A14	156.1	88.1	76.1	58.3	47.5	4	10	M14 x 1	50	19	4	12	M8 x 1.25
						20			153.1	98.1											
						30			163.1	108.1											
						50			208.1	128.1							75				
		50				10			160.1	92.1	80.1	62.3	51.5				50				
						20			157.1	102.1											
						30			167.1	112.1											
						50			212.1	132.1							75				

Dimensions Per Vacuum Inlet

Model									P	Q	R	S	Fitting part min. hole size
	Vacuum inlet direction	❶ Pad dia.	Form	❷ *1 Material	❸ Buffer spec.	❹ Buffer stroke	❺ Vacuum inlet	❻ Connection thread					
ZP	R	10 13 16	B	N S U F GN GS	J K	10 20 30 40 50	04	A10	8	4	17.5	8.2	ø2.5
							06			6	18.3	10.4	ø4
		20 25 32				10 20 30 40 50	04		12	4	19.3	8.2	ø3
							06			6	20.5	10.4	ø4.5
							08		16	8	23.5	13.2	ø6
		40 50				10 20 30 50	06	A14	12	6	20.5	10.4	ø4.5
							08		16	8	23.5	13.2	ø6

*1 N: NBR, S: Silicone rubber, U: Urethane rubber, F: FKM, GN: Conductive NBR, GS: Conductive silicone rubber

*2 Indicates the minimum hole size of the adapter or vacuum pad

Dimensions/Models

With buffer/barb fitting ø6 to ø8

The drawings show the type with a buffer plate.

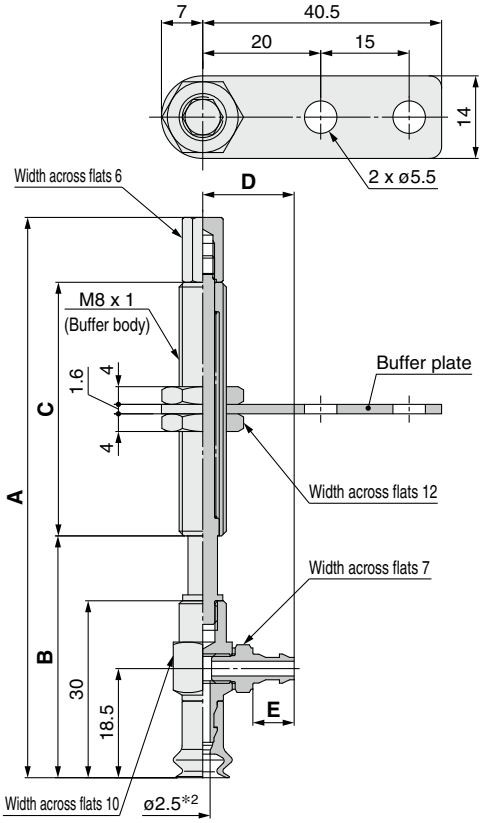

Construction p. 116
Buffer Assembly p. 126

ZPY 06 B N J 6 - N4 - A8

❶ ❷ ❸ ❹ ❺ ❻

❸ Buffer specification

J	Rotating
K	Non-rotating
JN	Rotating (Without buffer plate)
KN	Non-rotating (Without buffer plate)

❻ Connection thread (Male thread)

A8	M8 x 1

❺ Vacuum inlet (Barb fitting)

N4	For ø4 nylon tubing	M-5AN-4
N6	For ø6 nylon tubing	M-5AN-6
U4	For ø4 soft tubing	M-5AU-4
U6	For ø6 soft tubing	M-5AU-6

Model									A	B	C
	Vacuum inlet direction	❶ Pad dia.	Form	❷ Material *1	❸ Buffer spec.	❹ Buffer stroke	❺ Vacuum inlet	❻ Connection thread			
ZP	Y	06 08	B	N S U F GN GS	J K JN KN	6	N4 N6 U4 U6	A8	64	38	15
						10			95	41	43
						15			100	46	
						25			110	56	

Dimensions Per Vacuum Inlet

Model									D	E	Fitting part min. hole size
	Vacuum inlet direction	❶ Pad dia.	Form	❷ Material *1	❸ Buffer spec.	❹ Buffer stroke	❺ Vacuum inlet	❻ Connection thread			
ZP	Y	06 08	B	N S U F GN GS	J K JN KN	6 10 15 25	N4 U4	A8	13.5	5	ø1.8
							N6 U6		15.5	7	ø2.5

*1 N: NBR, S: Silicone rubber, U: Urethane rubber, F: FKM, GN: Conductive NBR, GS: Conductive silicone rubber

*2 Indicates the minimum hole size of the adapter or vacuum pad

Dimensions/Models

With buffer/barb fitting ø10 to ø50

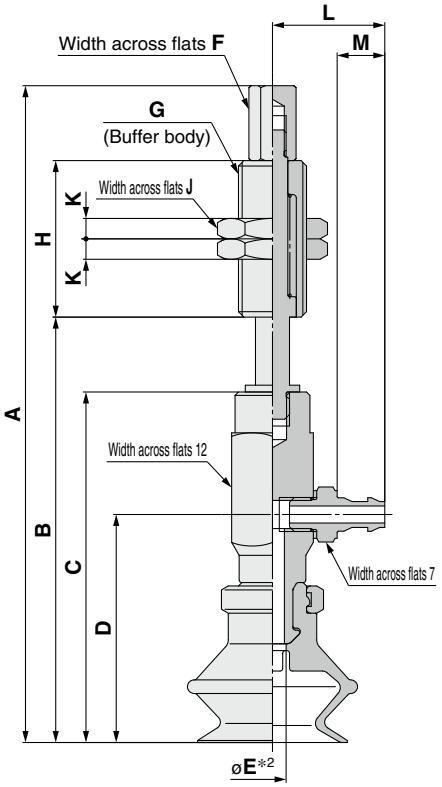

Construction	p. 118
Buffer Assembly	p. 126

ZPY 10 B N J 10 - N4 - A10

❶ ❷ ❸ ❹ ❺ ❻

❸ Buffer specification

J	Rotating
K	Non-rotating

❻ Connection thread (Male thread)

A10	M10 x 1
A14	M14 x 1

❺ Vacuum inlet (Barb fitting)

N4	For ø4 nylon tubing	M-5AN-4
N6	For ø6 nylon tubing	M-5AN-6
U4	For ø4 soft tubing	M-5AU-4
U6	For ø6 soft tubing	M-5AU-6

Model									A	B	C	D	E*2	F	G	H	J	K
	Vacuum inlet direction	❶ Pad dia.	Form	❷ Material*1	❸ Buffer spec.	❹ Buffer stroke	❺ Vacuum inlet	❻ Connection thread										
ZP	Y	10	B	N S U F GN GS	J K	10	N4 N6 U4 U6	A10	87	53	42	26	2.5	6	M10 x 1	23	14	3
						20			125	63						51		
						30			135	73								
						40			171	83						77		
						50			181	93								
		13				10			89.5	55.5	44.5	28.5				23		
						20			127.5	65.5						51		
						30			137.5	75.5								
						40			173.5	85.5						77		
						50			183.5	95.5								
		16				10			91	57	46	30				23		
						20			129	67						51		
						30			139	77								
						40			175	87						77		
						50			185	97								
		20				10			96.5	62.5	51.5	33.5	3.5	6	M10 x 1	23	14	3
						20			134.5	72.5						51		
						30			144.5	82.5								
						40			180.5	92.5						77		
						50			190.5	102.5								
		25				10			97	63	52	34				23		
						20			135	73						51		
						30			145	83								
						40			181	93						77		
						50			191	103								
		32				10			102	68	57	39				23		
						20			140	78						51		
						30			150	88								
						40			186	98						77		
						50			196	108								
		40				10	N6 U6	A14	142	74	62	44	6	10	M14 x 1	50	19	4
						20			139	84								
						30			149	94								
						50			194	114						75		
		50				10			146	78	66	48				50		
						20			143	88								
						30			153	98								
						50			198	118						75		

Dimensions Per Vacuum Inlet

Model									L	M	Fitting part min. hole size
	Vacuum inlet direction	❶ Pad dia.	Form	❷ Material*1	❸ Buffer spec.	❹ Buffer stroke	❺ Vacuum inlet	❻ Connection thread			
ZP	Y	10 13 16 20 25 32	B	N S U F GN GS	J K	10 20 30 40 50	N4 U4	A10	14.5	5	ø1.8
							N6 U6		16.5	7	ø2.5
		40 50					N6 U6	A14	16.5	7	ø2.5

*1 N: NBR, S: Silicone rubber, U: Urethane rubber, F: FKM, GN: Conductive NBR, GS: Conductive silicone rubber
*2 Indicates the minimum hole size of the adapter or vacuum pad

Basic Pad
Thin Flat Type
ZP Series

How to Order

		Dimensions/ Models	Construction	Mounting Bracket Assembly
Pad unit	ZP 10 UT N	p. 87	p. 115	From p. 121
With adapter	ZP ☐ T 10 UT N – A5 – ☐	From p. 87	p. 115	From p. 121
With buffer	ZP T 10 UT N J 6 – B3 – A8	From p. 92	p. 116	From p. 124

∗ Pad unit's sales unit: 10 pcs.

❶ ❷ ❸ ❹ ❺ ❻ ❼ ❽

• Thin flat type

❶ Adapter material

Nil	Brass
S∗1	Stainless steel (Stainless steel 304)

∗1 Only applicable to the pad with adapter (Vacuum inlet direction: Vertical (Option "T"))

❷ Vacuum inlet direction

Nil	Pad unit
T	Vertical
R	Lateral (With One-touch fitting)
Y	Lateral (With barb fitting)

❸ Pad diameter

10	ø10
13	ø13
16	ø16

❹ Material

N	NBR
S	Silicone rubber∗1 ∗2
U	Urethane rubber
F	FKM
GN	Conductive NBR
GS	Conductive silicone rubber

∗1 Uses a material compliant with a dissolution test of the FDA (U.S. Food and Drug Administration) regulation 21CFR§177.2600 for "Rubber articles intended for repeated use."

∗2 Uses a material compliant with the standards for "Rubber apparatus (excluding baby drinking apparatus) and containers/packaging" (D3) (Partial revision: Japanese Ministry of Health, Labour, and Welfare Notification No. 595, 2012) in Section 3 "Apparatus and Containers/Packaging" of the Japan Food Sanitation Act, Article 18 "Specifications and Standards for Food and Food Additives, etc." (Japanese Ministry of Health and Welfare Notification No. 370, 1959)

❺ Buffer specification

J	Rotating
K	Non-rotating
JN	Rotating (Without buffer plate)
KN	Non-rotating (Without buffer plate)

❻ Buffer stroke

Stroke [mm]	Pad diameter
	All sizes
6	●
10	●
15	●
25	●

With adapter

❼ Vacuum inlet

○: ZP☐T/Vertical ●: ZPR/Lateral (With One-touch fitting) △: ZPY/Lateral (With barb fitting)

Type	Symbol	Size	Pad diameter
			All sizes
Male thread	A5	M5 x 0.8	○
	A6	M6 x 1	○
Female thread	B4	M4 x 0.7	○
	B5	M5 x 0.8	○
One-touch fitting	04	ø4	●
	06	ø6	●
Barb fitting	N4	For ø4 nylon tubing	△
	N6	For ø6 nylon tubing	△
	U4	For ø4 soft tubing	△
	U6	For ø6 soft tubing	△

❽ Connection thread

●: ZPR/Lateral (With One-touch fitting) △: ZPY/Lateral (With barb fitting)

Type	Symbol	Size	Pad diameter
			All sizes
Male thread∗1	A5	M5 x 0.8	●△
	A6	M6 x 1	●△
Female thread	B4	M4 x 0.7	●△
	B5	M5 x 0.8	●△

It is not necessary to select a connection thread for ○:ZP☐T/Vertical.
Use the vacuum inlet.

∗1 The mounting nut is shipped together with the product (unassembled).

With buffer

❼ Vacuum inlet

○: ZPT/Vertical ●: ZPR/Lateral (With One-touch fitting) △: ZPY/Lateral (With barb fitting)

Type	Symbol	Size	Pad diameter
			All sizes
Female thread	B3	M3 x 0.5	○
	B5	M5 x 0.8	○
One-touch fitting	04	ø4	○●
	06	ø6	○●
Barb fitting	N4	For ø4 nylon tubing∗1	○△
	N6	For ø6 nylon tubing∗1	△
	U4	For ø4 soft tubing∗2	○△
	U6	For ø6 soft tubing∗2	△

∗1 Nylon tube piping
∗2 Soft nylon/Polyurethane tube piping

❽ Connection thread

○: ZPT/Vertical ●: ZPR/Lateral (With One-touch fitting) △: ZPY/Lateral (With barb fitting)

Type	Symbol	Size	Pad diameter
			All sizes
Male thread∗1	A8	M8 x 1	○●△

∗1 The mounting nut, buffer plate, and ○: ZPT/Vertical buffer are shipped together with the product (unassembled).

Dimensions/Models

Single unit ø10 to ø16

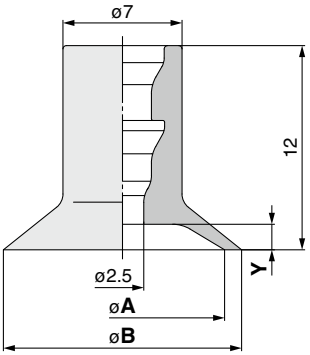

Construction p. 115
Mounting Bracket Assembly From p. 121

ZP 10 UT N
❶ ❷

Model				A	B	Y
	❶ Pad dia.	Form	❷ *1 Material			
ZP	10	UT	N S U F GN GS	10	11	1
	13			13	14	1.5
	16			16	17	

*1 N: NBR, S: Silicone rubber, U: Urethane rubber, F: FKM, GN: Conductive NBR, GS: Conductive silicone rubber

With adapter ø10 to ø16

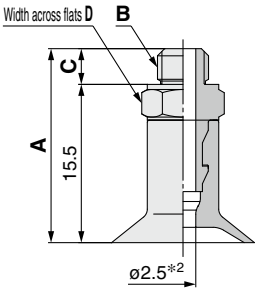

Construction p. 115
Adapter Assembly p. 121

ZP □ T 10 UT N - A5
❶ ❷ ❸ ❹

❶ Adapter material

Nil	Brass
S	Stainless steel (Stainless steel 304)

❹ Vacuum inlet (Male thread)

A5	M5 x 0.8
A6	M6 x 1

Model							A	B	C	D
	❶ Adapter material	Vacuum inlet direction	❷ Pad dia.	Form	❸ *1 Material	❹ Vacuum inlet				
ZP	Nil S	T	10 13 16	UT	N S U F GN GS	A5	19	M5 x 0.8	3.5	7
						A6	20	M6 x 1	4.5	8

*1 N: NBR, S: Silicone rubber, U: Urethane rubber, F: FKM, GN: Conductive NBR, GS: Conductive silicone rubber
*2 Indicates the minimum hole size of the adapter or vacuum pad

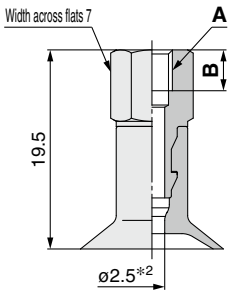

Construction p. 115
Adapter Assembly p. 121

ZP □ T 10 UT N - B4
❶ ❷ ❸ ❹

❶ Adapter material

Nil	Brass
S	Stainless steel (Stainless steel 304)

❹ Vacuum inlet (Female thread)

B4	M4 x 0.7
B5	M5 x 0.8

Model							A	B
	❶ Adapter material	Vacuum inlet direction	❷ Pad dia.	Form	❸ *1 Material	❹ Vacuum inlet		
ZP	Nil S	T	10 13 16	UT	N S U F GN GS	B4	M4 x 0.7	4
						B5	M5 x 0.8	5

*1 N: NBR, S: Silicone rubber, U: Urethane rubber, F: FKM, GN: Conductive NBR, GS: Conductive silicone rubber
*2 Indicates the minimum hole size of the adapter or vacuum pad

Dimensions/Models

With adapter/One-touch fitting ø10 to ø16

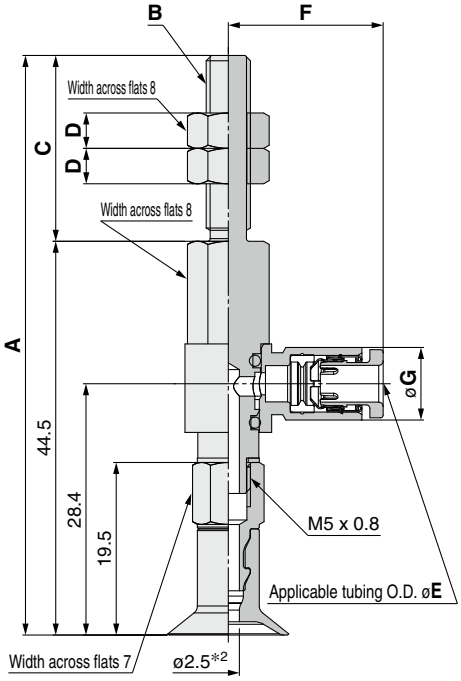

Construction p. 115
Adapter Assembly p. 122

ZPR 10 UT N - 04 - A5

❶ ❷ ❸ ❹

❸ Vacuum inlet (One-touch fitting)

04	ø4
06	ø6

❹ Connection thread (Male thread)

A5	M5 x 0.8
A6	M6 x 1

Model							A	B	C	D
	Vacuum inlet direction	❶ Pad dia.	Form	❷ Material *1	❸ Vacuum inlet	❹ Connection thread				
ZP	R	10 13 16	UT	N S U F GN GS	04 06	A5	65.5	M5 x 0.8	21	4
						A6	70.5	M6 x 1	26	4

Dimensions Per Vacuum Inlet

Model							E	F	G	Fitting part min. hole size
	Vacuum inlet direction	❶ Pad dia.	Form	❷ Material *1	❸ Vacuum inlet	❹ Connection thread				
ZP	R	10 13 16	UT	N S U F GN GS	04	A5 A6	4	17.5	8.2	ø2.5
					06		6	18.3	10.4	ø4

*1 N: NBR, S: Silicone rubber, U: Urethane rubber, F: FKM, GN: Conductive NBR, GS: Conductive silicone rubber

*2 Indicates the minimum hole size of the adapter or vacuum pad

Dimensions/Models

With adapter/One-touch fitting ø10 to ø16

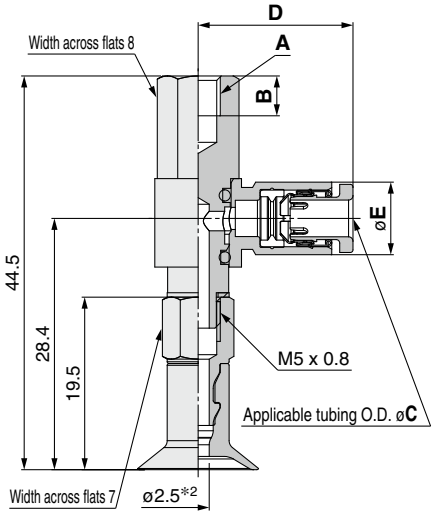

Construction p. 115
Adapter Assembly p. 122

ZPR 10 UT N - 04 - B4

❶ ❷ ❸ ❹

❹ **Connection thread (Female thread)**

B4	M4 x 0.7
B5	M5 x 0.8

❸ **Vacuum inlet (One-touch fitting)**

04	ø4
06	ø6

Model							A	B
	Vacuum inlet direction	❶ Pad dia.	Form	❷ Material *1	❸ Vacuum inlet	❹ Connection thread		
ZP	R	10 13 16	UT	N S U F GN GS	04 06	B4	M4 x 0.7	4.5
						B5	M5 x 0.8	5.5

Dimensions Per Vacuum Inlet

Model							C	D	E	Fitting part min. hole size
	Vacuum inlet direction	❶ Pad dia.	Form	❷ Material *1	❸ Vacuum inlet	❹ Connection thread				
ZP	R	10 13 16	UT	N S U F GN GS	04	B4 B5	4	17.5	8.2	ø2.5
					06		6	18.3	10.4	ø4

*1 N: NBR, S: Silicone rubber, U: Urethane rubber, F: FKM, GN: Conductive NBR, GS: Conductive silicone rubber

*2 Indicates the minimum hole size of the adapter or vacuum pad

Dimensions/Models

With adapter/barb fitting ø10 to ø16

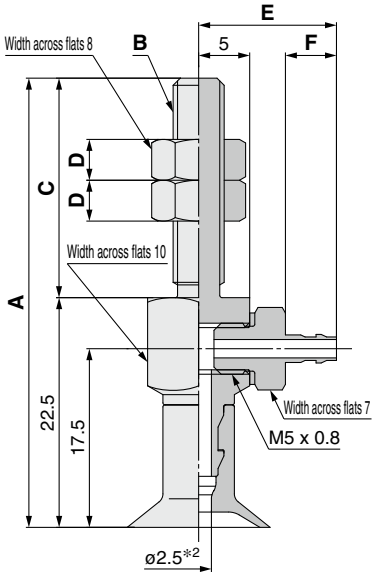

Construction p. 115
Adapter Assembly p. 123

ZPY 10 UT N - N4 - A5

❶ ❷ ❸ ❹

❸ Vacuum inlet (Barb fitting)

N4	For ø4 nylon tubing	M-5AN-4
N6	For ø6 nylon tubing	M-5AN-6
U4	For ø4 soft tubing	M-5AU-4
U6	For ø6 soft tubing	M-5AU-6

❹ Connection thread (Male thread)

A5	M5 x 0.8
A6	M6 x 1

Model							A	B	C	D
	Vacuum inlet direction	❶ Pad dia.	Form	❷ Material *1	❸ Vacuum inlet	❹ Connection thread				
ZP	Y	10 13 16	UT	N S U F GN GS	N4 N6 U4 U6	A5	44	M5 x 0.8	21.5	4
						A6	49.5	M6 x 1	27	4

Dimensions Per Vacuum Inlet

Model							E	F	Fitting part min. hole size
	Vacuum inlet direction	❶ Pad dia.	Form	❷ Material *1	❸ Vacuum inlet	❹ Connection thread			
ZP	Y	10 13 16	UT	N S U F GN GS	N4 U4	A5 A6	13.5	5	ø1.8
					N6 U6		15.5	7	ø2.5

*1 N: NBR, S: Silicone rubber, U: Urethane rubber, F: FKM, GN: Conductive NBR, GS: Conductive silicone rubber
*2 Indicates the minimum hole size of the adapter or vacuum pad

Dimensions/Models

With adapter/barb fitting ø10 to ø16

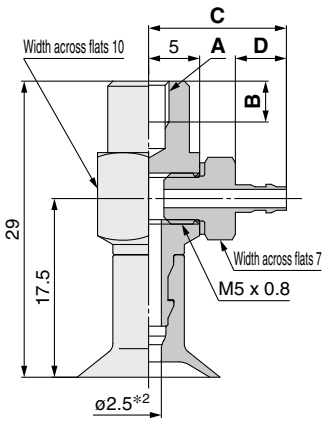

Construction p. 115
Adapter Assembly p. 123

ZPY 10 UT N - N4 - B4

❶ ❷ ❸ ❹

❹ Connection thread (Female thread)

B4	M4 x 0.7
B5	M5 x 0.8

Vacuum inlet ❸ (Barb fitting)

N4	For ø4 nylon tubing	M-5AN-4
N6	For ø6 nylon tubing	M-5AN-6
U4	For ø4 soft tubing	M-5AU-4
U6	For ø6 soft tubing	M-5AU-6

Model							A	B
	Vacuum inlet direction	❶ Pad dia.	Form	❷ Material *1	❸ Vacuum inlet	❹ Connection thread		
ZP	Y	10 13 16	UT	N S U F GN GS	N4 N6 U4 U6	B4	M4 x 0.7	4
						B5	M5 x 0.8	5

Dimensions Per Vacuum Inlet

Model							C	D	Fitting part min. hole size
	Vacuum inlet direction	❶ Pad dia.	Form	❷ Material *1	❸ Vacuum inlet	❹ Connection thread			
ZP	Y	10 13 16	UT	N S U F GN GS	N4 U4	B4 B5	13.5	5	ø1.8
					N6 U6		15.5	7	ø2.5

*1 N: NBR, S: Silicone rubber, U: Urethane rubber, F: FKM, GN: Conductive NBR, GS: Conductive silicone rubber
*2 Indicates the minimum hole size of the adapter or vacuum pad

Dimensions/Models

With buffer ø10 to ø16

The drawings show the type with a buffer plate.

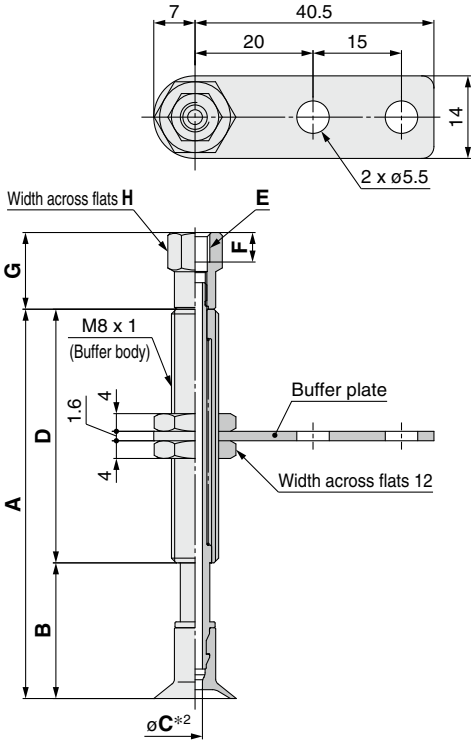

ZPT 10 UT N J 6 - B3 - A8

❶ ❷ ❸ ❹ ❺ ❻

❸ Buffer specification

J	Rotating
K	Non-rotating
JN	Rotating (Without buffer plate)
KN	Non-rotating (Without buffer plate)

❻ Connection thread (Male thread)

A8	M8 x 1

❺ Vacuum inlet

B3	M3 x 0.5	Female thread	
B5	M5 x 0.8		
04	ø4	One-touch fitting	KQ2H04-M5N
06	ø6		KQ2H06-M5N
N4	For ø4 nylon tubing	Barb fitting	
U4	For ø4 soft tubing		

Model									A	B	C*2	D
	Vacuum inlet direction	❶ Pad dia.	Form	❷ Material *1	❸ Buffer spec.	❹ Buffer stroke	❺ Vacuum inlet	❻ Connection thread				
ZP	T	10 13 16	UT	N S U F GN GS	J K JN KN	6	B3 B5 04 06 N4 U4	A8	33	18	J: 2.5 K: 2	15
						10			66	23		43
						15			71	28		
						25			81	38		

Dimensions Per Vacuum Inlet: Female Thread

Model									E	F	G	H
	Vacuum inlet direction	❶ Pad dia.	Form	❷ Material *1	❸ Buffer spec.	❹ Buffer stroke	❺ Vacuum inlet	❻ Connection thread				
ZP	T	10 13 16	UT	N S U F GN GS	J K JN KN	6 10 15 25	B3	A8	M3 x 0.5	3	11	6
							B5		M5 x 0.8	5	13	8

Dimensions Per Vacuum Inlet: One-touch Fitting

Model									G	H	J	Fitting part min. hole size
	Vacuum inlet direction	❶ Pad dia.	Form	❷ Material *1	❸ Buffer spec.	❹ Buffer stroke	❺ Vacuum inlet	❻ Connection thread				
ZP	T	10 13 16	UT	N S U F GN GS	J K JN KN	6 10 15 25	04	A8	27.7	8	4	ø2.5
							06			10	6	

Dimensions Per Vacuum Inlet: Barb Fitting

Model									G	H	Fitting part min. hole size
	Vacuum inlet direction	❶ Pad dia.	Form	❷ Material *1	❸ Buffer spec.	❹ Buffer stroke	❺ Vacuum inlet	❻ Connection thread			
ZP	T	10 13 16	UT	N S U F GN GS	J K JN KN	6 10 15 25	N4	A8	14	6	ø1.8
							U4				

*1 N: NBR, S: Silicone rubber, U: Urethane rubber, F: FKM, GN: Conductive NBR, GS: Conductive silicone rubber

*2 Indicates the minimum hole size of the adapter or vacuum pad

Vacuum inlet: One-touch fitting

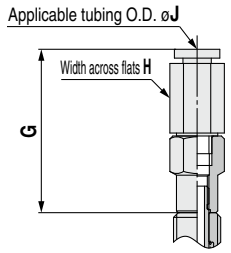

Vacuum inlet: Barb fitting

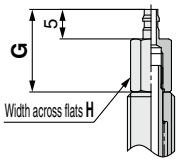

Construction p. 116
Buffer Assembly p. 124

Dimensions/Models

With buffer/One-touch fitting ø10 to ø16

The drawings show the type with a buffer plate.

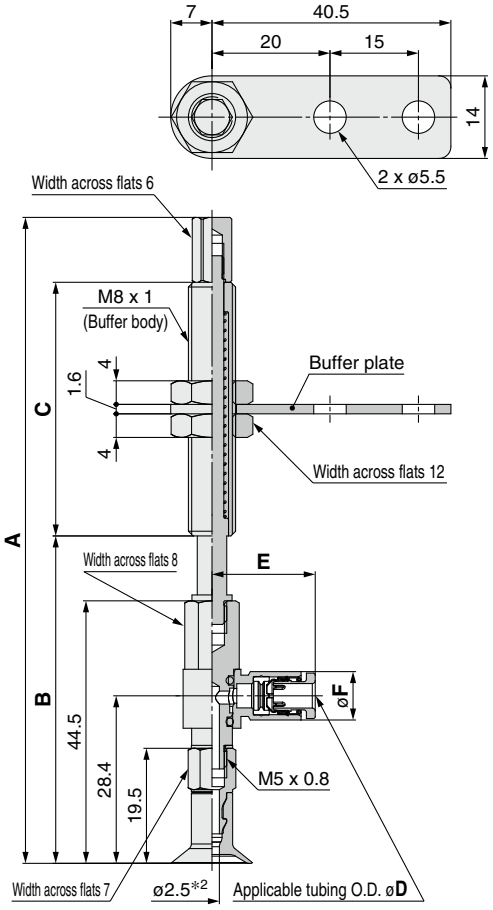

Construction p. 116
Buffer Assembly p. 125

ZPR 10 UT N J 6 - 04 - A8

❶ ❷ ❸ ❹ ❺ ❻

❸ Buffer specification

J	Rotating
K	Non-rotating
JN	Rotating (Without buffer plate)
KN	Non-rotating (Without buffer plate)

❻ Connection thread (Male thread)

A8	M8 x 1

❺ Vacuum inlet (One-touch fitting)

04	ø4
06	ø6

Model									A	B	C
	Vacuum inlet direction	❶ Pad dia.	Form	❷ *1 Material	❸ Buffer spec.	❹ Buffer stroke	❺ Vacuum inlet	❻ Connection thread			
ZP	R	10 13 16	UT	N S U F GN GS	J K JN KN	6	04 06	A8	78.5	52.5	15
						10			109.5	55.5	43
						15			114.5	60.5	
						25			124.5	70.5	

Dimensions Per Vacuum Inlet

Model									D	E	F	Fitting part min. hole size
	Vacuum inlet direction	❶ Pad dia.	Form	❷ *1 Material	❸ Buffer spec.	❹ Buffer stroke	❺ Vacuum inlet	❻ Connection thread				
ZP	R	10 13 16	UT	N S U F GN GS	J K JN KN	6 10 15 25	04	A8	4	17.5	8.2	ø2.5
							06		6	18.3	10.4	ø4

*1 N: NBR, S: Silicone rubber, U: Urethane rubber, F: FKM, GN: Conductive NBR, GS: Conductive silicone rubber
*2 Indicates the minimum hole size of the adapter or vacuum pad

Dimensions/Models

With buffer/barb fitting ø10 to ø16

The drawings show the type with a buffer plate.

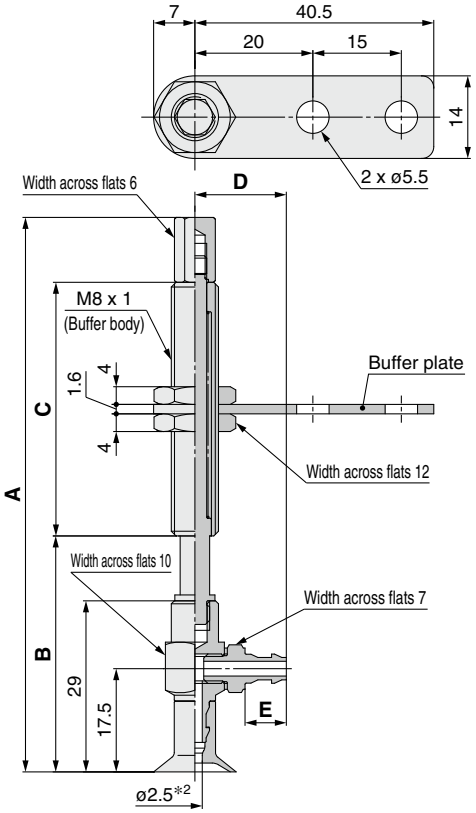

Construction p. 116
Buffer Assembly p. 126

ZPY 10 UT N J 6 - N4 - A8

❶ ❷ ❸ ❹ ❺ ❻

❸ Buffer specification

J	Rotating
K	Non-rotating
JN	Rotating (Without buffer plate)
KN	Non-rotating (Without buffer plate)

❻ Connection thread (Male thread)

A8	M8 x 1

❺ Vacuum inlet (Barb fitting)

N4	For ø4 nylon tubing	M-5AN-4
N6	For ø6 nylon tubing	M-5AN-6
U4	For ø4 soft tubing	M-5AU-4
U6	For ø6 soft tubing	M-5AU-6

Model									A	B	C
	Vacuum inlet direction	❶ Pad dia.	Form	❷ Material *1	❸ Buffer spec.	❹ Buffer stroke	❺ Vacuum inlet	❻ Connection thread			
ZP	Y	10 13 16	UT	N S U F GN GS	J K JN KN	6	N4 N6 U4 U6	A8	63	37	15
						10			94	40	43
						15			99	45	
						25			109	55	

Dimensions Per Vacuum Inlet

Model									D	E	Fitting part min. hole size
	Vacuum inlet direction	❶ Pad dia.	Form	❷ Material *1	❸ Buffer spec.	❹ Buffer stroke	❺ Vacuum inlet	❻ Connection thread			
ZP	Y	10 13 16	UT	N S U F GN GS	J K JN KN	6 10 15 25	N4 U4	A8	13.5	5	ø1.8
							N6 U6		15.5	7	ø2.5

*1 N: NBR, S: Silicone rubber, U: Urethane rubber, F: FKM, GN: Conductive NBR, GS: Conductive silicone rubber
*2 Indicates the minimum hole size of the adapter or vacuum pad

Basic Pad

Thin Flat Type with Ribs

ZP Series

How to Order

		Dimensions/ Models	Construction	Mounting Bracket Assembly
Pad unit	ZP 10 CT N	p. 96	p. 115	From p. 121
With adapter	ZP ❶ T ❷ 10 ❸ CT ❹ N – A5 ❼ – ❽	From p. 96	p. 115	From p. 121
With buffer	ZP T 10 CT N ❹ J ❺ 6 ❻ – B3 ❼ – A8 ❽	From p. 101	p. 116	From p. 124

∗ Pad unit's sales unit: 10 pcs.

❶ ❷ ❸ ❹ ❺ ❻ ❼ ❽

Thin flat type with ribs

❶ Adapter material

Nil	Brass
S∗1	Stainless steel (Stainless steel 304)

∗1 Only applicable to the pad with adapter (Vacuum inlet direction: Vertical (Option "T"))

❷ Vacuum inlet direction

Nil	Pad unit
T	Vertical
R	Lateral (With One-touch fitting)
Y	Lateral (With barb fitting)

❸ Pad diameter

10	ø10
13	ø13
16	ø16

❹ Material

N	NBR
S	Silicone rubber∗1 ∗2
U	Urethane rubber
F	FKM
GN	Conductive NBR
GS	Conductive silicone rubber

∗1 Uses a material compliant with a dissolution test of the FDA (U.S. Food and Drug Administration) regulation 21CFR§177.2600 for "Rubber articles intended for repeated use."

∗2 Uses a material compliant with the standards for "Rubber apparatus (excluding baby drinking apparatus) and containers/packaging" (D3) (Partial revision: Japanese Ministry of Health, Labour, and Welfare Notification No. 595, 2012) in Section 3 "Apparatus and Containers/Packaging" of the Japan Food Sanitation Act, Article 18 "Specifications and Standards for Food and Food Additives, etc." (Japanese Ministry of Health and Welfare Notification No. 370, 1959)

❺ Buffer specification

J	Rotating
K	Non-rotating
JN	Rotating (Without buffer plate)
KN	Non-rotating (Without buffer plate)

❻ Buffer stroke

Stroke [mm]	Pad diameter
	All sizes
6	●
10	●
15	●
25	●

With adapter

❼ Vacuum inlet

○: ZP□T/Vertical ●: ZPR/Lateral (With One-touch fitting) △: ZPY/Lateral (With barb fitting)

Type	Symbol	Size	Pad diameter
			All sizes
Male thread	**A5**	M5 x 0.8	○
	A6	M6 x 1	○
Female thread	**B4**	M4 x 0.7	○
	B5	M5 x 0.8	○
One-touch fitting	**04**	ø4	●
	06	ø6	●
Barb fitting	**N4**	For ø4 nylon tubing	△
	N6	For ø6 nylon tubing	△
	U4	For ø4 soft tubing	△
	U6	For ø6 soft tubing	△

❽ Connection thread

●: ZPR/Lateral (With One-touch fitting) △: ZPY/Lateral (With barb fitting)

Type	Symbol	Size	Pad diameter
			All sizes
Male thread∗1	**A5**	M5 x 0.8	●△
	A6	M6 x 1	●△
Female thread	**B4**	M4 x 0.7	●△
	B5	M5 x 0.8	●△

It is not necessary to select a connection thread for ○:ZP□T/Vertical. Use the vacuum inlet.

∗1 The mounting nut is shipped together with the product (unassembled).

With buffer

❼ Vacuum inlet

○: ZPT/Vertical ●: ZPR/Lateral (With One-touch fitting) △: ZPY/Lateral (With barb fitting)

Type	Symbol	Size	Pad diameter
			All sizes
Female thread	**B3**	M3 x 0.5	○
	B5	M5 x 0.8	○
One-touch fitting	**04**	ø4	○●
	06	ø6	○●
Barb fitting	**N4**	For ø4 nylon tubing∗1	○△
	N6	For ø6 nylon tubing∗1	△
	U4	For ø4 soft tubing∗2	○△
	U6	For ø6 soft tubing∗2	△

∗1 Nylon tube piping

∗2 Soft nylon/Polyurethane tube piping

❽ Connection thread

○: ZPT/Vertical ●: ZPR/Lateral (With One-touch fitting) △: ZPY/Lateral (With barb fitting)

Type	Symbol	Size	Pad diameter
			All sizes
Male thread∗1	**A8**	M8 x 1	○●△

∗1 The mounting nut, buffer plate, and ○: ZPT/Vertical buffer are shipped together with the product (unassembled).

Dimensions/Models

Single unit ø10 to ø16

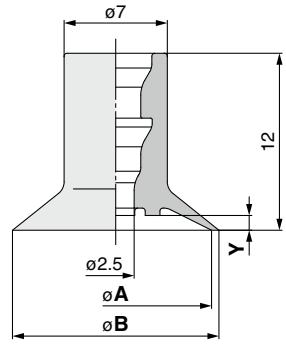

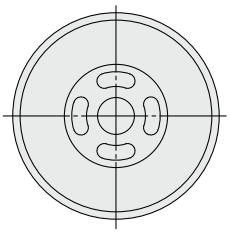

ZP 10 CT N
❶ ❷

Model ❶ Pad dia.	Form	❷ Material *1	A	B	Y
ZP 10	CT	N S U F GN GS	10	11	0.8
ZP 13	CT	N S U F GN GS	13	14	1
ZP 16	CT	N S U F GN GS	16	17	1

*1 N: NBR, S: Silicone rubber, U: Urethane rubber, F: FKM, GN: Conductive NBR, GS: Conductive silicone rubber

Construction p. 115
Mounting Bracket Assembly From p. 121

With adapter ø10 to ø16

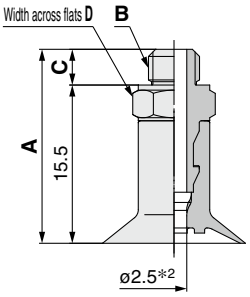

Construction p. 115
Adapter Assembly p. 121

ZP □ T 10 CT N - A5
❶ ❷ ❸ ❹

❶ **Adapter material**

Nil	Brass
S	Stainless steel (Stainless steel 304)

❹ **Vacuum inlet (Male thread)**

A5	M5 x 0.8
A6	M6 x 1

Model ❶ Adapter material	Vacuum inlet direction	❷ Pad dia.	Form	❸ Material *1	❹ Vacuum inlet	A	B	C	D
ZP Nil S	T	10 13 16	CT	N S U F GN GS	A5	19	M5 x 0.8	3.5	7
ZP Nil S	T	10 13 16	CT	N S U F GN GS	A6	20	M6 x 1	4.5	8

*1 N: NBR, S: Silicone rubber, U: Urethane rubber, F: FKM, GN: Conductive NBR, GS: Conductive silicone rubber
*2 Indicates the minimum hole size of the adapter or vacuum pad

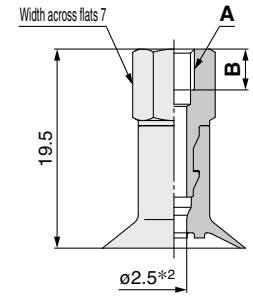

Construction p. 115
Adapter Assembly p. 121

ZP □ T 10 CT N - B4
❶ ❷ ❸ ❹

❶ **Adapter material**

Nil	Brass
S	Stainless steel (Stainless steel 304)

❹ **Vacuum inlet (Female thread)**

B4	M4 x 0.7
B5	M5 x 0.8

Model ❶ Adapter material	Vacuum inlet direction	❷ Pad dia.	Form	❸ Material *1	❹ Vacuum inlet	A	B
ZP Nil S	T	10 13 16	CT	N S U F GN GS	B4	M4 x 0.7	4
ZP Nil S	T	10 13 16	CT	N S U F GN GS	B5	M5 x 0.8	5

*1 N: NBR, S: Silicone rubber, U: Urethane rubber, F: FKM, GN: Conductive NBR, GS: Conductive silicone rubber
*2 Indicates the minimum hole size of the adapter or vacuum pad

Dimensions/Models

With adapter/One-touch fitting ø10 to ø16

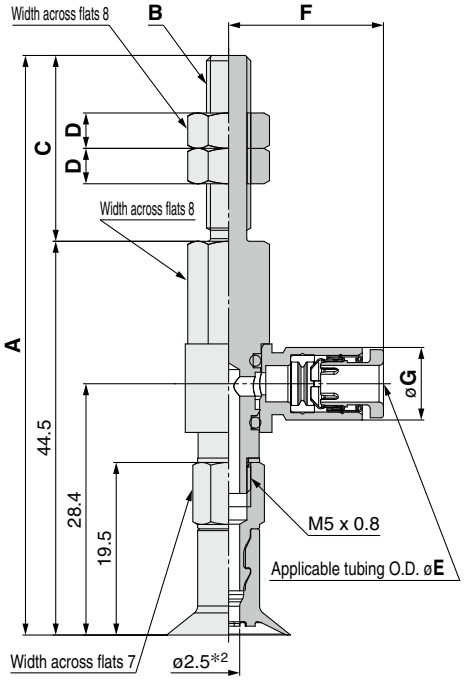

Construction p. 115
Adapter Assembly p. 122

ZPR 10 CT N - 04 - A5

❶ ❷ ❸ ❹

❸ **Vacuum inlet (One-touch fitting)**

04	ø4
06	ø6

❹ **Connection thread (Male thread)**

A5	M5 x 0.8
A6	M6 x 1

Model							A	B	C	D
	Vacuum inlet direction	❶ Pad dia.	Form	❷ Material *1	❸ Vacuum inlet	❹ Connection thread				
ZP	R	10 13 16	CT	N S U F GN GS	04 06	A5	65.5	M5 x 0.8	21	4
						A6	70.5	M6 x 1	26	4

Dimensions Per Vacuum Inlet

Model							E	F	G	Fitting part min. hole size
	Vacuum inlet direction	❶ Pad dia.	Form	❷ Material *1	❸ Vacuum inlet	❹ Connection thread				
ZP	R	10 13 16	CT	N S U F GN GS	04	A5 A6	4	17.5	8.2	ø2.5
					06		6	18.3	10.4	ø4

*1 N: NBR, S: Silicone rubber, U: Urethane rubber, F: FKM, GN: Conductive NBR, GS: Conductive silicone rubber
*2 Indicates the minimum hole size of the adapter or vacuum pad

Dimensions/Models

With adapter/One-touch fitting ø10 to ø16

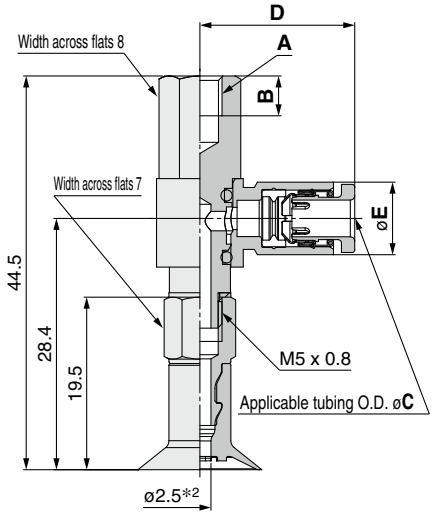

Construction p. 115
Adapter Assembly p. 122

ZPR 10 CT N - 04 - B4

❶ ❷ ❸ ❹

❹ **Connection thread (Female thread)**

B4	M4 x 0.7
B5	M5 x 0.8

❸ **Vacuum inlet (One-touch fitting)**

04	ø4
06	ø6

Model							A	B
	Vacuum inlet direction	❶ Pad dia.	Form	❷ Material *1	❸ Vacuum inlet	❹ Connection thread		
ZP	R	10 13 16	CT	N S U F GN GS	04 06	B4	M4 x 0.7	4.5
						B5	M5 x 0.8	5.5

Dimensions Per Vacuum Inlet

Model							C	D	E	Fitting part min. hole size
	Vacuum inlet direction	❶ Pad dia.	Form	❷ Material *1	❸ Vacuum inlet	❹ Connection thread				
ZP	R	10 13 16	CT	N S U F GN GS	04	B4 B5	4	17.5	8.2	ø2.5
					06		6	18.3	10.4	ø4

*1 N: NBR, S: Silicone rubber, U: Urethane rubber, F: FKM, GN: Conductive NBR, GS: Conductive silicone rubber
*2 Indicates the minimum hole size of the adapter or vacuum pad

Dimensions/Models

With adapter/barb fitting ø10 to ø16

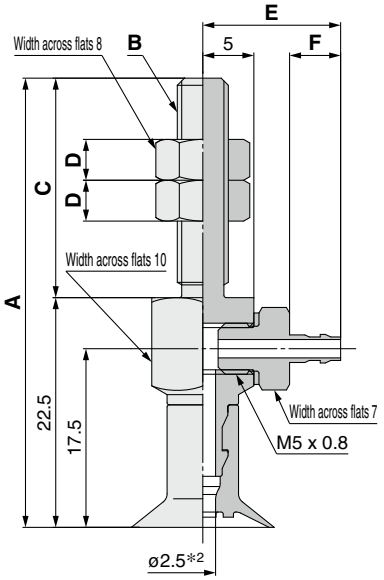

Construction p. 115
Adapter Assembly p. 123

ZPY 10 CT N - N4 - A5

❶ ❷ ❸ ❹

❹ **Connection thread (Male thread)**

A5	M5 x 0.8
A6	M6 x 1

❸ **Vacuum inlet (Barb fitting)**

N4	For ø4 nylon tubing	M-5AN-4
N6	For ø6 nylon tubing	M-5AN-6
U4	For ø4 soft tubing	M-5AU-4
U6	For ø6 soft tubing	M-5AU-6

Model							A	B	C	D
	Vacuum inlet direction	❶ Pad dia.	Form	❷ Material *1	❸ Vacuum inlet	❹ Connection thread				
ZP	Y	10 13 16	CT	N S U F GN GS	N4 N6 U4 U6	A5	44	M5 x 0.8	21.5	4
						A6	49.5	M6 x 1	27	4

Dimensions Per Vacuum Inlet

Model							E	F	Fitting part min. hole size
	Vacuum inlet direction	❶ Pad dia.	Form	❷ Material *1	❸ Vacuum inlet	❹ Connection thread			
ZP	Y	10 13 16	CT	N S U F GN GS	N4 U4	A5 A6	13.5	5	ø1.8
					N6 U6		15.5	7	ø2.5

*1 N: NBR, S: Silicone rubber, U: Urethane rubber, F: FKM, GN: Conductive NBR, GS: Conductive silicone rubber
*2 Indicates the minimum hole size of the adapter or vacuum pad

Dimensions/Models

With adapter/barb fitting ø10 to ø16

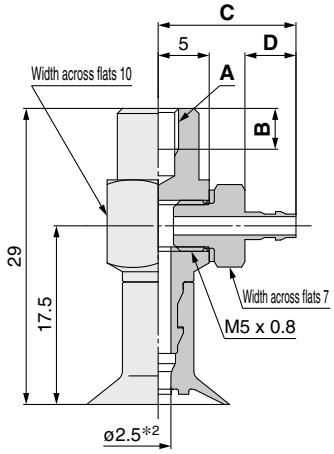

Construction p. 115
Adapter Assembly p. 123

ZPY 10 CT N - N4 - B4

❶ ❷ ❸ ❹

Vacuum inlet ❸ (Barb fitting)

N4	For ø4 nylon tubing	M-5AN-4
N6	For ø6 nylon tubing	M-5AN-6
U4	For ø4 soft tubing	M-5AU-4
U6	For ø6 soft tubing	M-5AU-6

❹ Connection thread (Female thread)

B4	M4 x 0.7
B5	M5 x 0.8

Model							A	B
	Vacuum inlet direction	❶ Pad dia.	Form	❷ Material *1	❸ Vacuum inlet	❹ Connection thread		
ZP	Y	10 13 16	CT	N S U F GN GS	N4 N6 U4 U6	B4	M4 x 0.7	4
						B5	M5 x 0.8	5

Dimensions Per Vacuum Inlet

Model							C	D	Fitting part min. hole size
	Vacuum inlet direction	❶ Pad dia.	Form	❷ Material *1	❸ Vacuum inlet	❹ Connection thread			
ZP	Y	10 13 16	CT	N S U F GN GS	N4 U4	B4 B5	13.5	5	ø1.8
					N6 U6		15.5	7	ø2.5

*1 N: NBR, S: Silicone rubber, U: Urethane rubber, F: FKM, GN: Conductive NBR, GS: Conductive silicone rubber
*2 Indicates the minimum hole size of the adapter or vacuum pad

Dimensions/Models

With buffer ø10 to ø16

The drawings show the type with a buffer plate.

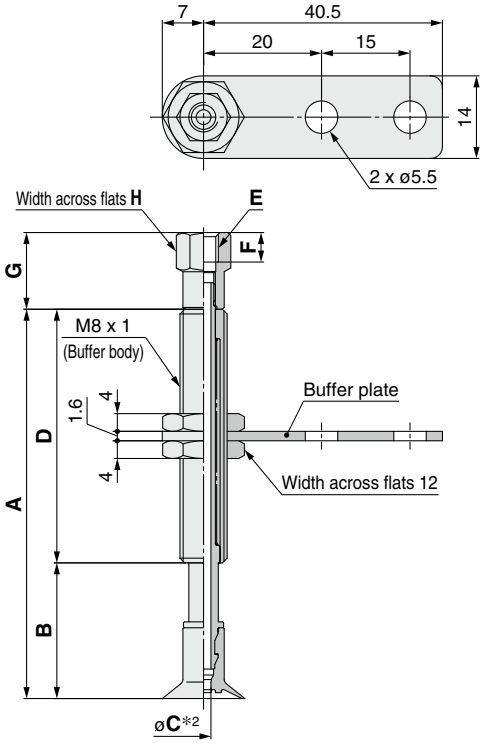

Vacuum inlet: One-touch fitting

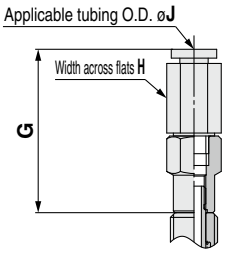

Vacuum inlet: Barb fitting

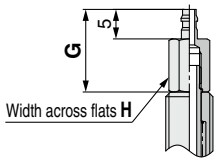

Construction	p. 116
Buffer Assembly	p. 124

ZPT 10 CT N J 6 - B3 - A8
❶ ❷ ❸ ❹ ❺ ❻

❸ Buffer specification

J	Rotating
K	Non-rotating
JN	Rotating (Without buffer plate)
KN	Non-rotating (Without buffer plate)

❻ Connection thread (Male thread)

A8	M8 x 1

❺ Vacuum inlet

B3	M3 x 0.5	Female thread	
B5	M5 x 0.8		
04	ø4	One-touch fitting	KQ2H04-M5N
06	ø6		KQ2H06-M5N
N4	For ø4 nylon tubing	Barb fitting	
U4	For ø4 soft tubing		

Model									A	B	C*2	D
	Vacuum inlet direction	❶ Pad dia.	Form	❷ Material *1	❸ Buffer spec.	❹ Buffer stroke	❺ Vacuum inlet	❻ Connection thread				
ZP	T	10 13 16	CT	N S U F GN GS	J K JN KN	6	B3 B5 04 06 N4 U4	A8	33	18	J: 2.5 K: 2	15
						10			66	23		43
						15			71	28		
						25			81	38		

Dimensions Per Vacuum Inlet: Female Thread

Model									E	F	G	H
	Vacuum inlet direction	❶ Pad dia.	Form	❷ Material *1	❸ Buffer spec.	❹ Buffer stroke	❺ Vacuum inlet	❻ Connection thread				
ZP	T	10 13 16	CT	N S U F GN GS	J K JN KN	6 10 15 25	B3	A8	M3 x 0.5	3	11	6
							B5		M5 x 0.8	5	13	8

Dimensions Per Vacuum Inlet: One-touch Fitting

Model									G	H	J	Fitting part min. hole size
	Vacuum inlet direction	❶ Pad dia.	Form	❷ Material *1	❸ Buffer spec.	❹ Buffer stroke	❺ Vacuum inlet	❻ Connection thread				
ZP	T	10 13 16	CT	N S U F GN GS	J K JN KN	6 10 15 25	04	A8	27.7	8	4	ø2.5
							06			10	6	

Dimensions Per Vacuum Inlet: Barb Fitting

Model									G	H	Fitting part min. hole size
	Vacuum inlet direction	❶ Pad dia.	Form	❷ Material *1	❸ Buffer spec.	❹ Buffer stroke	❺ Vacuum inlet	❻ Connection thread			
ZP	T	10 13 16	CT	N S U F GN GS	J K JN KN	6 10 15 25	N4	A8	14	6	ø1.8
							U4				

*1 N: NBR, S: Silicone rubber, U: Urethane rubber, F: FKM, GN: Conductive NBR, GS: Conductive silicone rubber
*2 Indicates the minimum hole size of the adapter or vacuum pad

Dimensions/Models

With buffer/One-touch fitting ø10 to ø16

The drawings show the type with a buffer plate.

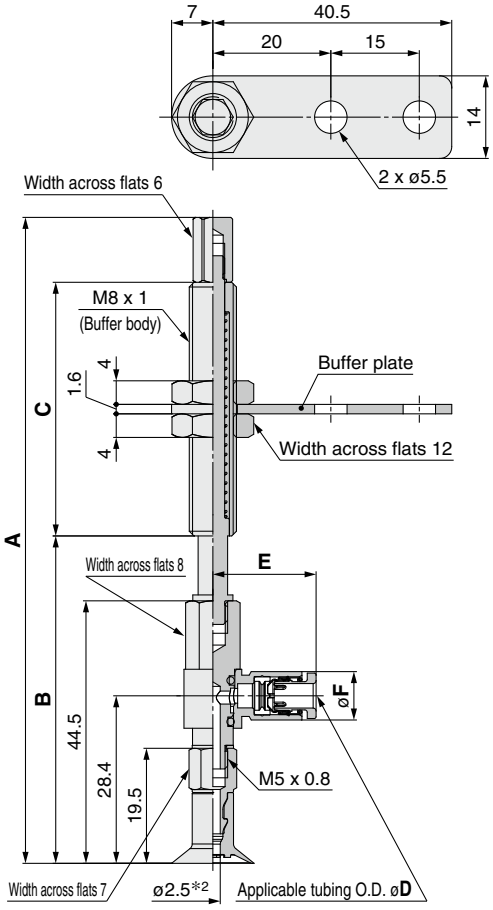

Construction p. 116
Buffer Assembly p. 125

ZPR 10 CT N J 6 - 04 - A8
❶ ❷ ❸ ❹ ❺ ❻

❸ Buffer specification

J	Rotating
K	Non-rotating
JN	Rotating (Without buffer plate)
KN	Non-rotating (Without buffer plate)

❺ Vacuum inlet (One-touch fitting)

04	ø4
06	ø6

❻ Connection thread (Male thread)

A8	M8 x 1

Model									A	B	C
	Vacuum inlet direction	❶ Pad dia.	Form	❷ Material *1	❸ Buffer spec.	❹ Buffer stroke	❺ Vacuum inlet	❻ Connection thread			
ZP	R	10 13 16	CT	N S U F GN GS	J K JN KN	6	04 06	A8	78.5	52.5	15
						10			109.5	55.5	43
						15			114.5	60.5	
						25			124.5	70.5	

Dimensions Per Vacuum Inlet

Model									D	E	F	Fitting part min. hole size
	Vacuum inlet direction	❶ Pad dia.	Form	❷ Material *1	❸ Buffer spec.	❹ Buffer stroke	❺ Vacuum inlet	❻ Connection thread				
ZP	R	10 13 16	CT	N S U F GN GS	J K JN KN	6 10 15 25	04	A8	4	17.5	8.2	ø2.5
							06		6	18.3	10.4	ø4

*1 N: NBR, S: Silicone rubber, U: Urethane rubber, F: FKM, GN: Conductive NBR, GS: Conductive silicone rubber
*2 Indicates the minimum hole size of the adapter or vacuum pad

Dimensions/Models

With buffer/barb fitting ø10 to ø16

The drawings show the type with a buffer plate.

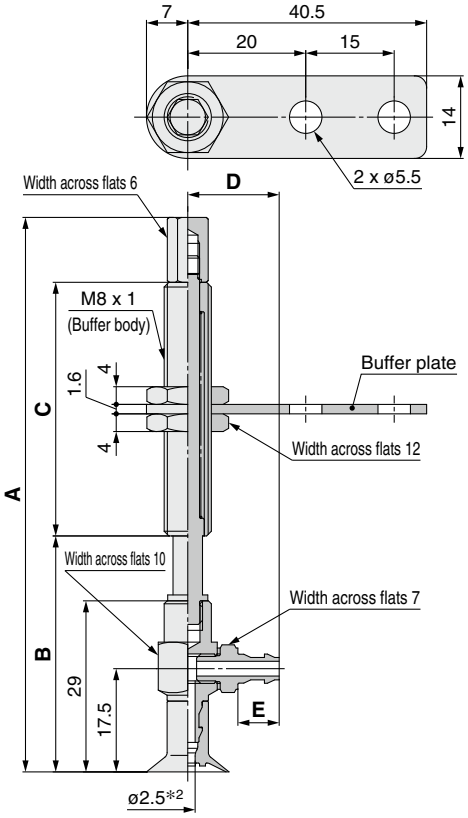

Construction p. 116
Buffer Assembly p. 126

ZPY 10 CT N J 6 - N4 - A8

❶ ❷ ❹

❸ Buffer specification

J	Rotating
K	Non-rotating
JN	Rotating (Without buffer plate)
KN	Non-rotating (Without buffer plate)

❻ Connection thread (Male thread)

A8	M8 x 1

❺ Vacuum inlet (Barb fitting)

N4	For ø4 nylon tubing	M-5AN-4
N6	For ø6 nylon tubing	M-5AN-6
U4	For ø4 soft tubing	M-5AU-4
U6	For ø6 soft tubing	M-5AU-6

Model									A	B	C
	Vacuum inlet direction	❶ Pad dia.	Form	❷ Material *1	❸ Buffer spec.	❹ Buffer stroke	❺ Vacuum inlet	❻ Connection thread			
ZP	Y	10 13 16	CT	N S U F GN GS	J K JN KN	6	N4 N6 U4 U6	A8	63	37	15
						10			94	40	43
						15			99	45	
						25			109	55	

Dimensions Per Vacuum Inlet

Model									D	E	Fitting part min. hole size
	Vacuum inlet direction	❶ Pad dia.	Form	❷ Material *1	❸ Buffer spec.	❹ Buffer stroke	❺ Vacuum inlet	❻ Connection thread			
ZP	Y	10 13 16	CT	N S U F GN GS	J K JN KN	6 10 15 25	N4 U4	A8	13.5	5	ø1.8
							N6 U6		15.5	7	ø2.5

*1 N: NBR, S: Silicone rubber, U: Urethane rubber, F: FKM, GN: Conductive NBR, GS: Conductive silicone rubber
*2 Indicates the minimum hole size of the adapter or vacuum pad

Basic Pad

Deep Type

ZP Series

How to Order

		Dimensions/ Models	Construction	Mounting Bracket Assembly
Pad unit	ZP□ 10 D N – □	p. 105	p. 117	From p. 121
With adapter	ZP□ T 10 D N – A5 – □	From p. 105	p. 117	From p. 121
With buffer	ZP T 10 D N J 10 – B5 – A10	From p. 111	p. 118	From p. 124

❶ ❷ ❸ ❹ ❺ ❻ ❼ ❽ ❾

• Deep type

❶ Adapter (Lock ring) material

Nil	Brass
S∗1	Stainless steel (Stainless steel 304)

∗1 Only applicable to the pad unit (with lock ring) and the pad with adapter (Vacuum inlet direction: Vertical (Option "T"))

❷ Vacuum inlet direction

Nil	Pad unit
T	Vertical
R	Lateral (With One-touch fitting)
Y	Lateral (With barb fitting)

❸ Pad diameter

10	ø10
16	ø16
25	ø25
40	ø40

❹ Material

N	NBR
S	Silicone rubber∗1 ∗2
U	Urethane rubber
F	FKM
GN	Conductive NBR
GS	Conductive silicone rubber

∗1 Uses a material compliant with a dissolution test of the FDA (U.S. Food and Drug Administration) regulation 21CFR§177.2600 for "Rubber articles intended for repeated use."

∗2 Uses a material compliant with the standards for "Rubber apparatus (excluding baby drinking apparatus) and containers/packaging" (D3) (Partial revision: Japanese Ministry of Health, Labour, and Welfare Notification No. 595, 2012) in Section 3 "Apparatus and Containers/Packaging" of the Japan Food Sanitation Act, Article 18 "Specifications and Standards for Food and Food Additives, etc." (Japanese Ministry of Health and Welfare Notification No. 370, 1959)

❺ Buffer specification

J	Rotating
K	Non-rotating

❻ Buffer stroke

Stroke [mm]	Pad diameter [mm]			
	ø10	ø16	ø25	ø40
10	●	●	●	●
20	●	●	●	●
30	●	●	●	●
40	●	●	●	—
50	●	●	●	●

With adapter

❼ Vacuum inlet

○: ZP□T/Vertical ●: ZPR/Lateral (With One-touch fitting) △: ZPY/Lateral (With barb fitting)

Type	Symbol	Size	Pad diameter [mm]		
			ø10, ø16	ø25	ø40
Male thread	**AS5**	M5 x 0.8	○∗4	○∗4	—
	AS6	M6 x 1	○∗4	○∗4	○∗4
	AG01	G1/8	○∗4	○∗4	—
	AG02	G1/4	—	—	○∗4
Female thread	**Nil**	M3 x 0.5	○ (❽Connection thread: A5/A6)	○ (❽Connection thread: A6)	○ (❽Connection thread: A6)
		M5 x 0.8	—	○ (❽Connection thread: A8)	○ (❽Connection thread: A8)
	B5	M5 x 0.8	○∗4	○∗4	—
	B6	M6 x 1	○∗4	○∗4	○∗4
	B8	M8 x 1.25	—	○∗4	○∗4
	BG01	G1/8	○∗4	○∗4	—
	BG02	G1/4	—	—	○∗4
	B01	Rc1/8	○∗4	○∗4	○∗4
	N01∗3	NPT1/8	○∗4	○∗4	○∗4
	T01∗3	NPTF1/8	○∗4	○∗4	○∗4
One-touch fitting	**04**	ø4	●	●	—
	06	ø6	●	●	●
	08	ø8	—	●	●
Barb fitting	**N4**	For ø4 nylon tubing∗1	△	△	—
	N6	For ø6 nylon tubing∗1	△	△	△
	U4	For ø4 soft tubing∗2	△	△	—
	U6	For ø6 soft tubing∗2	△	△	△

∗1 Nylon tube piping ∗2 Soft nylon/Polyurethane tube piping
∗3 Not compatible with stainless steel materials ∗4 Use the connection thread.

❽ Connection thread ○: ZP□T/Vertical ●: ZPR/Lateral (With One-touch fitting) △: ZPY/Lateral (With barb fitting)

Type	Symbol	Size	Pad diameter [mm]		
			ø10, ø16	ø25	ø40
Male thread∗1	**A5**	M5 x 0.8	○∗2●△	—	—
	A6	M6 x 1	○∗2●△	○∗2●△	○∗2●△
	A8	M8 x 1	—	○∗2●△	○∗2●△
Female thread	**B5**	M5 x 0.8	●△	●△	—
	B6	M6 x 1	●△	●△	●△
	B8	M8 x 1.25	—	●△	●△

∗1 The mounting nut is shipped together with the product (unassembled).
∗2 ○: ZP□T/Vertical comes with a vacuum inlet (female thread).

With buffer

❼ Vacuum inlet

○: ZPT/Vertical ●: ZPR/Lateral (With One-touch fitting) △: ZPY/Lateral (With barb fitting)

Type	Symbol	Size	Pad diameter [mm]		
			ø10, ø16	ø25	ø40
Female thread	**B5**	M5 x 0.8	○	○	○
	B01	Rc1/8	—	—	○
	N01	NPT1/8	—	—	○
	T01	NPTF1/8	—	—	○
One-touch fitting	**04**	ø4	○●	○●	—
	06	ø6	○●	○●	○●
	08	ø8	—	●	○●
Barb fitting	**N4**	For ø4 nylon tubing∗1	△	△	—
	N6	For ø6 nylon tubing∗1	○△	○△	○△
	U4	For ø4 soft tubing∗2	△	△	—
	U6	For ø6 soft tubing∗2	○△	○△	○△

∗1 Nylon tube piping
∗2 Soft nylon/Polyurethane tube piping

❽ Connection thread

○: ZPT/Vertical ●: ZPR/Lateral (With One-touch fitting) △: ZPY/Lateral (With barb fitting)

Type	Symbol	Size	Pad diameter [mm]		
			ø10, ø16	ø25	ø40
Male thread∗1	**A10**	M10 x 1	○●△	○●△	—
	A14	M14 x 1	—	—	○●△

∗1 The mounting nut and ○: ZPT/Vertical buffer are shipped together with the product (unassembled).

❾ Lock ring

Symbol	Pad diameter
	All sizes
Nil	With lock ring
X19	Without lock ring

Lock ring unit

Part no.	Pad diameter [mm]
ZP□L1	ø10, ø16
ZP□L2	ø25
ZP□L3	ø40

□: Nil/Brass S/Stainless steel

∗ The pad unit lock ring is shipped together with the product (unassembled).

Dimensions/Models

Single unit ø10 to ø40

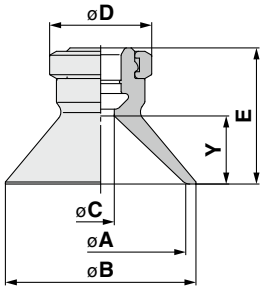

Construction p. 117
Mounting Bracket Assembly From p. 121

ZP □ 10 D N
❶ ❷ ❸

❶ Lock ring material

Nil	Brass
S	Stainless steel (Stainless steel 304)

Model					A	B	C	D	E	Y
	❶ Lock ring material	❷ Pad dia.	Form	❸ Material *1						
ZP	Nil S	10	D	N S U F GN GS	10	12	4	13	15	6
		16			16	18			16	7
		25			25	28		15	20	10
		40			40	43	7	18	29	17

*1 N: NBR, S: Silicone rubber, U: Urethane rubber, F: FKM, GN: Conductive NBR, GS: Conductive silicone rubber

With adapter ø10 to ø40

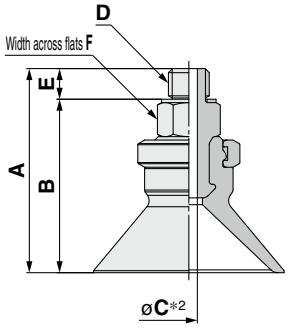

Construction p. 117
Adapter Assembly p. 121

ZP □ T 10 D N - AS5
❶ ❷ ❸ ❹

❶ Adapter (Lock ring) material

Nil	Brass
S	Stainless steel (Stainless steel 304)

❹ Vacuum inlet (Male thread)

AS5	M5 x 0.8
AS6	M6 x 1
AG01	G1/8
AG02	G1/4

Model							A	B	C*2	D	E	F
	❶ Adapter material	Vacuum inlet direction	❷ Pad dia.	Form	❸ Material *1	❹ Vacuum inlet						
ZP	Nil S	T	10	D	N S U F GN GS	AS5	24	20.5	2.5	M5 x 0.8	3.5	8
			16				25	21.5				
			25				29	25.5				
			10			AS6	25	20.5	2.5	M6 x 1	4.5	8
			16				26	21.5				
			25				30	25.5				
			40				40	35.5				12
			10			AG01	33	27.5	2.5	G1/8	5.5	17
			16				34	28.5				
			25				38	32.5	4			
			40			AG02	49.5	43	7	G1/4	6.5	21

*1 N: NBR, S: Silicone rubber, U: Urethane rubber, F: FKM, GN: Conductive NBR, GS: Conductive silicone rubber
*2 Indicates the minimum hole size of the adapter or vacuum pad

Dimensions/Models

With adapter ø10 to ø40

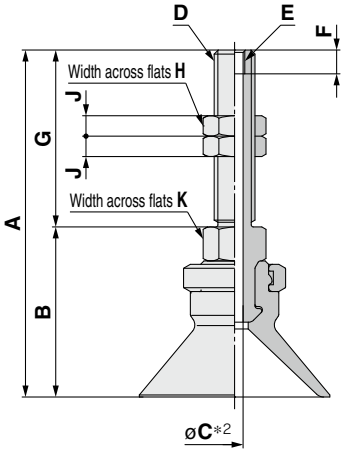

Construction p. 117
Adapter Assembly p. 121

ZP □ T 10 D N - A5
❶ ❷ ❸ ❹

❶ Adapter (Lock ring) material

Nil	Brass
S	Stainless steel (Stainless steel 304)

❹ Connection thread (Male thread)

A5	M5 x 0.8 (M3 x 0.5 With female thread)
A6	M6 x 1 (M3 x 0.5 With female thread)
A8	M8 x 1 (M5 x 0.8 With female thread)

Model							A	B	C*2	D	E	F	G	H	J	K
	❶ Adapter material	Vacuum inlet direction	❷ Pad dia.	Form	❸ Material *1	❹ Connection thread										
ZP	Nil S	T	10	D	N S U F GN GS	A5	41	20	2.5	M5 x 0.8	M3 x 0.5	3.5	21	8	4	8
			16				42	21								
			10			A6	46	20	2.5	M6 x 1	M3 x 0.5	3.5	26	8	4	8
			16				47	21								
			25				51	25								
			40				61	35.5								12
			25			A8	46	30	4	M8 x 1	M5 x 0.8	5	16	12	4	12
			40				51	35.5	4.2							

*1 N: NBR, S: Silicone rubber, U: Urethane rubber, F: FKM, GN: Conductive NBR, GS: Conductive silicone rubber
*2 Indicates the minimum hole size of the adapter or vacuum pad

Dimensions/Models

With adapter ø10 to ø40

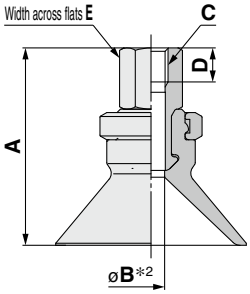

Construction p. 117
Adapter Assembly p. 121

ZP □ T 10 D N - B5
❶ ❷ ❸ ❹

❶ Adapter (Lock ring) material

Nil	Brass
S	Stainless steel (Stainless steel 304)

❹ Vacuum inlet (Female thread)

B5	M5 x 0.8
B6	M6 x 1
B8	M8 x 1.25
BG01	G1/8
BG02	G1/4
B01	Rc1/8
N01*1	NPT1/8
T01*1	NPTF1/8

*1 Not compatible with stainless steel materials

Model							A	B*2	C	D	E
	❶ Adapter material	Vacuum inlet direction	❷ Pad dia.	Form	❸ Material*1	❹ Vacuum inlet					
ZP	Nil S	T	10	D	N S U F GN GS	B5	24	2.5	M5 x 0.8	5	8
			16				25				
			25				29	4			
			10			B6	24	2.5	M6 x 1	6	8
			16				25				
			25				29	4			
			40				42.5	4.9			12
			25			B8	35	3.5	M8 x 1.25	8	12
			40				42.5	6.6			
			10			BG01	30	2.5	G1/8	7.4	14
			16				31				
			25				35	4			
			40			BG02	48.5	7	G1/4	11	17
			10			B01 N01*3 T01*3	30	2.5	Rc1/8 NPT1/8 NPTF1/8	—	12
			16				31				
			25				35	3.5			
			40				42.5	7			

*1 N: NBR, S: Silicone rubber, U: Urethane rubber, F: FKM, GN: Conductive NBR, GS: Conductive silicone rubber
*2 Indicates the minimum hole size of the adapter or vacuum pad
*3 Not compatible with stainless steel materials

Dimensions/Models

With adapter/One-touch fitting ø10 to ø40

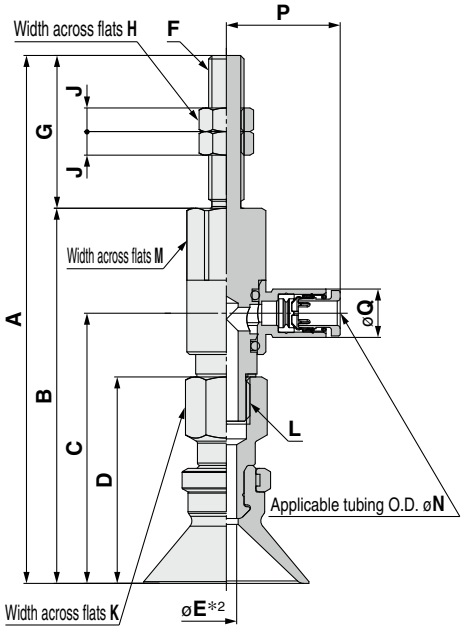

Construction p. 117
Adapter Assembly p. 122

ZPR 10 D N - 04 - A5

❶ ❷ ❸ ❹

❸ Vacuum inlet (One-touch fitting)

04	ø4
06	ø6
08	ø8

❹ Connection thread (Male thread)

A5	M5 x 0.8
A6	M6 x 1
A8	M8 x 1

Model							A	B	C	D	*2 E	F	G	H	J	K	L
	Vacuum inlet direction	❶ Pad dia.	Form	❷ Material *1	❸ Vacuum inlet	❹ Connection thread											
ZP	R	10	D	N S U F GN GS	04 06 08	A5	70	49	32.9	24	2.5	M5 x 0.8	21	8	4	8	M5 x 0.8
		16					71	50	33.9	25							
		10				A6	75	49	32.9	24	2.5	M6 x 1	26	8	4	8	M5 x 0.8
		16					76	50	33.9	25							
		25					89.5	63.6	45.8	35	3.5					12	M8 x 1.25
		40					97	71.1	53.3	42.5	4						
		25				A8	79.5	63.6	45.8	35	3.5	M8 x 1	16	12	4	12	M8 x 1.25
		40					87	71.1	53.3	42.5	4						

Dimensions Per Vacuum Inlet

Model							M	N	P	Q	Fitting part min. hole size
	Vacuum inlet direction	❶ Pad dia.	Form	❷ Material *1	❸ Vacuum inlet	❹ Connection thread					
ZP	R	10	D	N S U F GN GS	04	A5	8	4	17.5	8.2	ø2.5
		16			06	A6		6	18.3	10.4	ø4
		25			04	A6 A8	12	4	19.3	8.2	ø3
					06			6	20.5	10.4	ø4.5
					08		16	8	23.5	13.2	ø6
		40			06		12	6	20.5	10.4	ø4.5
					08		16	8	23.5	13.2	ø6

*1 N: NBR, S: Silicone rubber, U: Urethane rubber, F: FKM, GN: Conductive NBR, GS: Conductive silicone rubber
*2 Indicates the minimum hole size of the adapter or vacuum pad

Dimensions/Models

With adapter/One-touch fitting ø10 to ø40

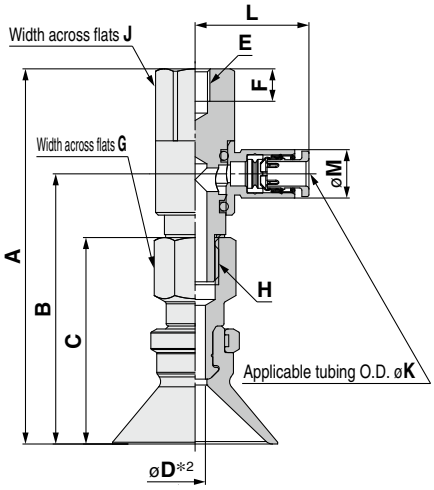

Construction p. 117
Adapter Assembly p. 122

ZPR 10 D N - 04 - B5
❶ ❷ ❸ ❹

❸ Vacuum inlet (One-touch fitting)

04	ø4
06	ø6
08	ø8

❹ Connection thread (Female thread)

B5	M5 x 0.8
B6	M6 x 1
B8	M8 x 1.25

Model							A	B	C	D*2	E	F	G	H
	Vacuum inlet direction	❶ Pad dia.	Form	❷ Material*1	❸ Vacuum inlet	❹ Connection thread								
ZP	R	10	D	N S U F GN GS	04 06 08	B5	49	32.9	24	2.5	M5 x 0.8	5.5	8	M5 x 0.8
		16					50	33.9	25					
		25					63.6	45.8	35	3.5			12	M8 x 1.25
		10				B6	49	32.9	24	2.5	M6 x 1	6.5	8	M5 x 0.8
		16					50	33.9	25					
		25					63.6	45.8	35	3.5			12	M8 x 1.25
		40					71.1	53.3	42.5	4				
		25				B8	63.6	45.8	35	3.5	M8 x 1.25	8.5	12	M8 x 1.25
		40					71.1	53.3	42.5	4				

Dimensions Per Vacuum Inlet

Model							J	K	L	M	Fitting part min. hole size
	Vacuum inlet direction	❶ Pad dia.	Form	❷ Material*1	❸ Vacuum inlet	❹ Connection thread					
ZP	R	10	D	N S U F GN GS	04	B5	8	4	17.5	8.2	ø2.5
		16			06	B6		6	18.3	10.4	ø4
		25			04	B5	12	4	19.3	8.2	ø3
					06	B6		6	20.5	10.4	ø4.5
					08	B8	16	8	23.5	13.2	ø6
		40			06	B6	12	6	20.5	10.4	ø4.5
					08	B8	16	8	23.5	13.2	ø6

*1 N: NBR, S: Silicone rubber, U: Urethane rubber, F: FKM, GN: Conductive NBR, GS: Conductive silicone rubber
*2 Indicates the minimum hole size of the adapter or vacuum pad

Dimensions/Models

With adapter/barb fitting ø10 to ø40

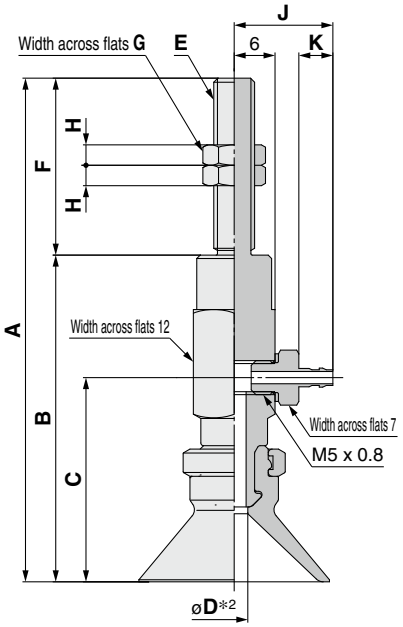

Construction p. 117
Adapter Assembly p. 123

ZPY 10 D N - N4 - A5

❶ ❷ ❸ ❹

❸ Vacuum inlet (Barb fitting)

N4	For ø4 nylon tubing	M-5AN-4
N6	For ø6 nylon tubing	M-5AN-6
U4	For ø4 soft tubing	M-5AU-4
U6	For ø6 soft tubing	M-5AU-6

❹ Connection thread (Male thread)

A5	M5 x 0.8
A6	M6 x 1
A8	M8 x 1

Model							A	B	C	D*2	E	F	G	H
	Vacuum inlet direction	❶ Pad dia.	Form	❷ Material*1	❸ Vacuum inlet	❹ Connection thread								
ZP	Y	10	D	N S U F GN GS	N4 N6 U4 U6	A5	62	41	25	2.5	M5 x 0.8	21	8	4
		16					63	42	26					
		10				A6	67	41	25	2.5	M6 x 1	26	8	4
		16					68	42	26					
		25					74	48	30	3.5				
		40					83	57	39	6				
		25				A8	64	48	30	3.5	M8 x 1	16	12	4
		40					73	57	39	6				

Dimensions Per Vacuum Inlet

Model							J	K	Fitting part min. hole size
	Vacuum inlet direction	❶ Pad dia.	Form	❷ Material*1	❸ Vacuum inlet	❹ Connection thread			
ZP	Y	10 16 25	D	N S U F GN GS	N4 U4	A5 A6	14.5	5	ø1.8
					N6 U6		16.5	7	ø2.5
		40			N6 U6	A6 A8	16.5	7	ø2.5

*1 N: NBR, S: Silicone rubber, U: Urethane rubber, F: FKM, GN: Conductive NBR, GS: Conductive silicone rubber
*2 Indicates the minimum hole size of the adapter or vacuum pad

Dimensions/Models

With adapter/barb fitting ø10 to ø40

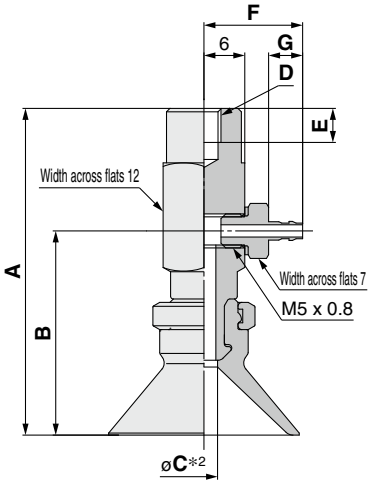

Construction p. 117
Adapter Assembly p. 123

ZPY 10 D N - N4 - B5
❶ ❷ ❸ ❹

❸ Vacuum inlet (Barb fitting)

N4	For ø4 nylon tubing	M-5AN-4
N6	For ø6 nylon tubing	M-5AN-6
U4	For ø4 soft tubing	M-5AU-4
U6	For ø6 soft tubing	M-5AU-6

❹ Connection thread (Female thread)

B5	M5 x 0.8
B6	M6 x 1
B8	M8 x 1.25

Model							A	B	C*2	D	E
	Vacuum inlet direction	❶ Pad dia.	Form	❷ Material*1	❸ Vacuum inlet	❹ Connection thread					
ZP	Y	10	D	N S U F GN GS	N4 N6 U4 U6	B5	41	25	2.5	M5 x 0.8	5
		16					42	26			
		25					48	30	3.5		
		10				B6	41	25	2.5	M6 x 1	6
		16					42	26			
		25					48	30	3.5		
		40					57	39	6		
		25				B8	48	30	3.5	M8 x 1.25	8
		40					57	39	6		

Dimensions Per Vacuum Inlet

Model							F	G	Fitting part min. hole size
	Vacuum inlet direction	❶ Pad dia.	Form	❷ Material*1	❸ Vacuum inlet	❹ Connection thread			
ZP	Y	10 16	D	N S U F GN GS	N4 U4	B4 B5	14.5	5	ø1.8
					N6 U6		16.5	7	ø2.5
		25			N4 U4	B5 B6 B8	14.5	5	ø1.8
					N6 U6		16.5	7	ø2.5
		40			N6 U6	B6 B8	16.5	7	ø2.5

*1 N: NBR, S: Silicone rubber, U: Urethane rubber, F: FKM, GN: Conductive NBR, GS: Conductive silicone rubber
*2 Indicates the minimum hole size of the adapter or vacuum pad

Dimensions/Models

With buffer ø10 to ø40

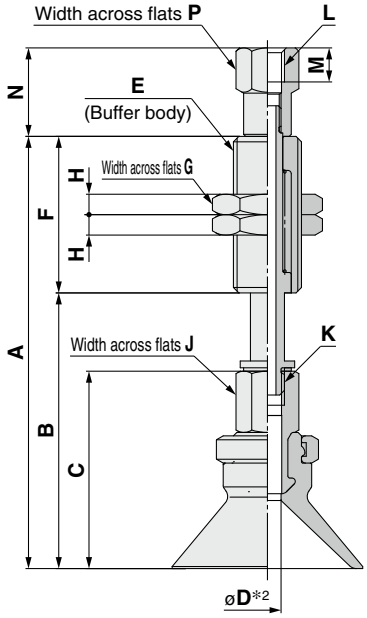

Construction	p. 118
Buffer Assembly	p. 124

ZPT 10 D N J 10 - B5 - A10

❶ ❷ ❹

❸ Buffer specification

J	Rotating
K	Non-rotating

❻ Connection thread (Male thread)

A10	M10 x 1
A14	M14 x 1

❺ Vacuum inlet (Female thread)

B5	M5 x 0.8
B01	Rc1/8
N01	NPT1/8
T01	NPTF1/8

Model									A	B	C	D*2	E	F	G	H	J	K
	Vacuum inlet direction	❶ Pad dia.	Form	❷ Material *1	❸ Buffer spec.	❹ Buffer stroke	❺ Vacuum inlet	❻ Connection thread										
ZP	T	10	D	N S U F GN GS	J K	10	B5 04 06 N6 U6	A10	58.5	35.5	24	J: 2.5 K: 2	M10 x 1	23	14	3	8	M5 x 0.8
						20			96.5	45.5				51				
						30			106.5	55.5								
						40			142.5	65.5				77				
						50			152.5	75.5								
		16				10			59.5	36.5	25			23				
						20			97.5	46.5				51				
						30			107.5	56.5								
						40			143.5	66.5				77				
						50			153.5	76.5								
		25				10			63.5	40.5	29			23				
						20			101.5	50.5				51				
						30			111.5	60.5								
						40			147.5	70.5				77				
						50			157.5	80.5								
		40				10	B5 B01 N01 T01 06 08 N6 U6	A14	105	55	42.5	4	M14 x 1	50	19	4	12	M8 x 1.25
						20			115	65								
						30			125	75								
						50			170	95				75				

Dimensions Per Vacuum Inlet: Female Thread

Model									L	M	N	P
	Vacuum inlet direction	❶ Pad dia.	Form	❷ Material *1	❸ Buffer spec.	❹ Buffer stroke	❺ Vacuum inlet	❻ Connection thread				
ZP	T	10 16 25	D	N S U F GN GS	J K	10 20 30 40 50	B5	A10	M5 x 0.8	5	13	8
		40				10	B5	A14	M5 x 0.8	4.5	15	10
						20 30 50				5	9	
						10	B01 N01 T01		Rc1/8 NPT1/8 NPTF1/8		16.5	13
						20 30 50					12	

*1 N: NBR, S: Silicone rubber, U: Urethane rubber, F: FKM, GN: Conductive NBR, GS: Conductive silicone rubber
*2 Indicates the minimum hole size of the adapter or vacuum pad

Dimensions/Models

With buffer ø10 to ø40

ZPT 10 D N J 10 - 04 - A10
❶ ❷ ❸ ❹ ❺ ❻

Buffer specification ❸

J	Rotating
K	Non-rotating

❻ Connection thread (Male thread)

A10	M10 x 1
A14	M14 x 1

❺ Vacuum inlet

			Pad diameter ø10 to ø25	Pad diameter ø40
04	ø4	One-touch fitting	KQ2H04-M5N	
06	ø6	One-touch fitting	KQ2H06-M5N	KQ2H06-01NS
08	ø8	One-touch fitting		KQ2H08-01NS
N6	For ø6 nylon tubing	Barb fitting		
U6	For ø6 soft tubing	Barb fitting		

Vacuum inlet: One-touch fitting

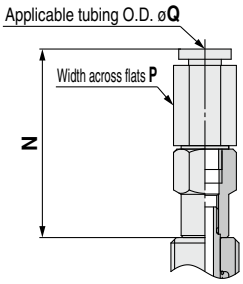

Vacuum inlet: Barb fitting

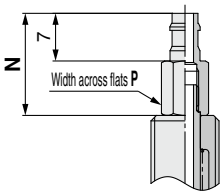

Construction p. 118
Buffer Assembly p. 124

Dimensions Per Vacuum Inlet: One-touch Fitting

Model: Vacuum inlet direction	❶ Pad dia.	Form	❷ Material *1	❸ Buffer spec.	❹ Buffer stroke	❺ Vacuum inlet	❻ Connection thread	N	P	Q	Fitting part min. hole size
ZP T	10 16 25	D	N S U F GN GS	J K	10 20 30 40 50	04	A10	27.7	8	4	ø2.5
ZP T	10 16 25	D	N S U F GN GS	J K	10 20 30 40 50	06	A10	27.7	10	6	ø2.5
ZP T	40	D	N S U F GN GS	J K	10	06	A14	31.8	10	6	ø4.5
ZP T	40	D	N S U F GN GS	J K	10	08	A14	35.9	14	8	ø6
ZP T	40	D	N S U F GN GS	J K	20 30 50	06	A14	19.9	12	6	ø3
ZP T	40	D	N S U F GN GS	J K	20 30 50	08	A14	24.9	14	8	ø3

Dimensions Per Vacuum Inlet: Barb Fitting

Model: Vacuum inlet direction	❶ Pad dia.	Form	❷ Material *1	❸ Buffer spec.	❹ Buffer stroke	❺ Vacuum inlet	❻ Connection thread	N	P	Fitting part min. hole size
ZP T	10 16 25	D	N S U F GN GS	J K	10 20 30 40 50	N6	A10	15	6	ø2.5
ZP T	10 16 25	D	N S U F GN GS	J K	10 20 30 40 50	U6	A10	15	6	ø2.5
ZP T	40	D	N S U F GN GS	J K	10	N6	A14	19	10	ø2.5
ZP T	40	D	N S U F GN GS	J K	10	U6	A14	19	10	ø2.5
ZP T	40	D	N S U F GN GS	J K	20 30 50	N6	A14	12	10	ø2.5
ZP T	40	D	N S U F GN GS	J K	20 30 50	U6	A14	12	10	ø2.5

*1 N: NBR, S: Silicone rubber, U: Urethane rubber, F: FKM, GN: Conductive NBR, GS: Conductive silicone rubber

Dimensions/Models

With buffer/One-touch fitting ø10 to ø40

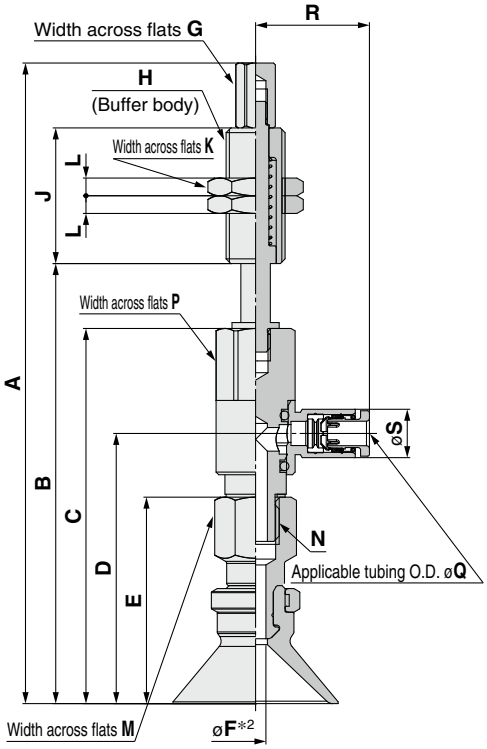

Construction	p. 118
Buffer Assembly	p. 125

ZPR 10 D N J 10 - 04 - A10

❶ ❷ ❹

❸ Buffer specification

J	Rotating
K	Non-rotating

❻ Connection thread (Male thread)

A10	M10 x 1
A14	M14 x 1

❺ Vacuum inlet (One-touch fitting)

04	ø4
06	ø6
08	ø8

Model									A	B	C	D	E	*2 F	G	H	J	K	L	M	N
	Vacuum inlet direction	❶ Pad dia.	Form	❷ *1 Material	❸ Buffer spec.	❹ Buffer stroke	❺ Vacuum inlet	❻ Connection thread													
ZP	R	10	D	N S U F GN GS	J K	10	04 06	A10	94	60	49	32.9	24	2.5	6	M10 x 1	23	14	3	8	M5 x 0.8
						20			132	70							51				
						30			142	80											
						40			178	90							77				
						50			188	100											
		16				10			95	61	50	33.9	25				23				
						20			133	71							51				
						30			143	81											
						40			179	91							77				
						50			189	101											
		25				10	04 06 08		108.6	74.6	63.6	45.8	35	3.5			23			12	M8 x 1.25
						20			146.6	84.6							51				
						30			156.6	94.6											
						40			192.6	104.6							77				
						50			202.6	114.6											
		40				10	06 08	A14	151.1	83.1	71.1	53.3	42.5	4	10	M14 x 1	50	19	4	12	M8 x 1.25
						20			148.1	93.1											
						30			158.1	103.1											
						50			203.1	123.1							75				

Dimensions Per Vacuum Inlet

Model									P	Q	R	S	Fitting part min. hole size
	Vacuum inlet direction	❶ Pad dia.	Form	❷ *1 Material	❸ Buffer spec.	❹ Buffer stroke	❺ Vacuum inlet	❻ Connection thread					
ZP	R	10 16	D	N S U F GN GS	J K	10 20 30 40 50	04	A10	8	4	17.5	8.2	ø2.5
							06			6	18.3	10.4	ø4
		25				10 20 30 40 50	04		12	4	19.3	8.2	ø3
							06			6	20.5	10.4	ø4.5
							08		16	8	23.5	13.2	ø6
		40				10 20 30 50	06	A14	12	6	20.5	10.4	ø4.5
							08		16	8	23.5	13.2	ø6

*1 N: NBR, S: Silicone rubber, U: Urethane rubber, F: FKM, GN: Conductive NBR, GS: Conductive silicone rubber
*2 Indicates the minimum hole size of the adapter or vacuum pad

Dimensions/Models

With buffer/barb fitting ø10 to ø40

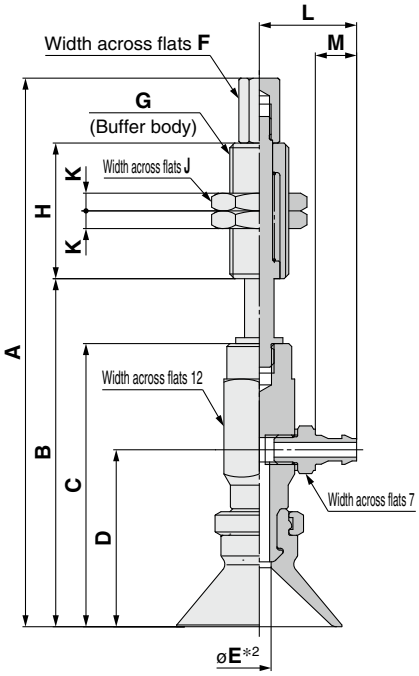

Construction p. 118
Buffer Assembly p. 126

ZPY 10 D N J 10 - N4 - A10
❶ ❷ ❹

Buffer specification ❸

J	Rotating
K	Non-rotating

❻ Connection thread (Male thread)

A10	M10 x 1
A14	M14 x 1

❺ Vacuum inlet (Barb fitting)

N4	For ø4 nylon tubing	M-5AN-4
N6	For ø6 nylon tubing	M-5AN-6
U4	For ø4 soft tubing	M-5AU-4
U6	For ø6 soft tubing	M-5AU-6

Model																				
	Vacuum inlet direction	❶ Pad dia.	Form	❷ Material *1	❸ Buffer spec.	❹ Buffer stroke	❺ Vacuum inlet	❻ Connection thread	A	B	C	D	E *2	F	G	H	J	K
ZP	Y	10	D	N S U F GN GS	J K	10	N4 N6 U4 U6	A10	86	52	41	25	2.5	6	M10 x 1	23	14	3
						20			124	62						51		
						30			134	72								
						40			170	82						77		
						50			180	92								
		16				10			87	53	42	26				23		
						20			125	63						51		
						30			135	73								
						40			171	83						77		
						50			181	93								
		25				10			93	59	48	30	3.5	6	M10 x 1	23	14	3
						20			131	69						51		
						30			141	79								
						40			177	89						77		
						50			187	99								
		40				10	N6 U6	A14	137	69	57	39	6	10	M14 x 1	50	19	4
						20			134	79								
						30			144	89								
						50			189	109						75		

Dimensions Per Vacuum Inlet

Model									L	M	Fitting part min. hole size
	Vacuum inlet direction	❶ Pad dia.	Form	❷ Material *1	❸ Buffer spec.	❹ Buffer stroke	❺ Vacuum inlet	❻ Connection thread			
ZP	Y	10 16 25	D	N S U F GN GS	J K	10 20 30 40 50	N4 U4	A10	14.5	5	ø1.8
							N6 U6		16.5	7	ø2.5
		40				10 20 30 50	N6 U6	A14	16.5	7	ø2.5

*1 N: NBR, S: Silicone rubber, U: Urethane rubber, F: FKM, GN: Conductive NBR, GS: Conductive silicone rubber
*2 Indicates the minimum hole size of the adapter or vacuum pad

Basic Pad *ZP Series*
Construction

With adapter | Flat type: ø2 to ø8 | Bellows type: ø6 to ø8 | Thin flat type/Thin flat type with ribs: ø10 to ø16

Vacuum inlet direction Vertical T Type/ZP□T

ZP□T□-(A5/A6)

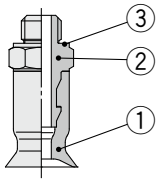

ZP□T□-(B4/B5)

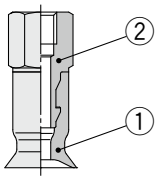

Component Parts

No.	Description	Material	Note
1	**Pad**	NBR, Silicone rubber, Urethane rubber, FKM, Conductive NBR, Conductive silicone rubber	Flat type Bellows type Thin flat type Thin flat type with ribs
2	**Adapter**	Brass (Electroless nickel plating)	**ZPT**
		Stainless steel	**ZPST**
3	**Gasket**	Stainless steel/NBR	**ZPT**
		Stainless steel/FKM	**ZPST**

Vacuum inlet direction Lateral R Type/ZPR

ZPR□-(04/06)-(A5/A6)

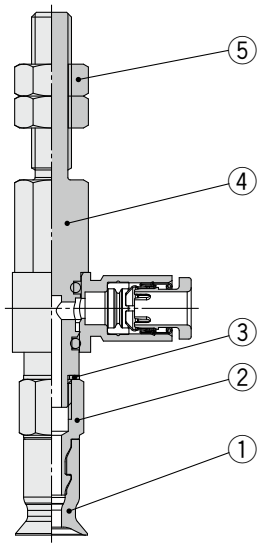

ZPR□-(04/06)-(B4/B5)

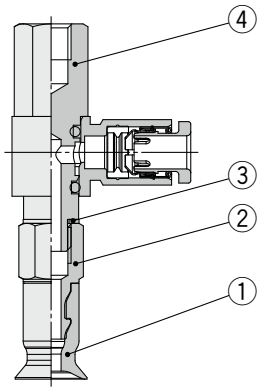

Component Parts

No.	Description	Material	Note
1	**Pad**	NBR, Silicone rubber, Urethane rubber, FKM, Conductive NBR, Conductive silicone rubber	Flat type Bellows type Thin flat type Thin flat type with ribs
2	**Adapter**	Brass (Electroless nickel plating)	
3	**Gasket**	Stainless steel/NBR	
4	**Adapter** **(With One-touch fitting)**	Brass (Electroless nickel plating), PBT, NBR, Stainless steel, POM	
5	**Nut**	Rolled steel (Zinc chromated)	M5 x 0.8 M6 x 1

Vacuum inlet direction Lateral Y Type/ZPY

ZPY□-(N4/N6/U4/U6)-(A5/A6)

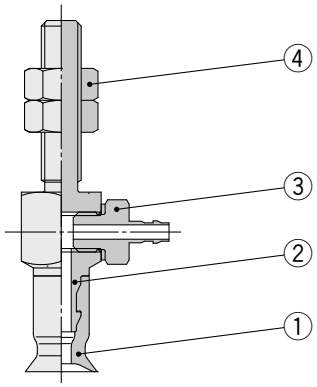

ZPY□-(N4/N6/U4/U6)-(B4/B5)

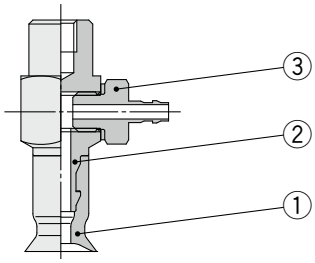

Component Parts

No.	Description	Material	Note
1	**Pad**	NBR, Silicone rubber, Urethane rubber, FKM, Conductive NBR, Conductive silicone rubber	Flat type Bellows type Thin flat type Thin flat type with ribs
2	**Adapter**	Brass (Electroless nickel plating)	
3	**Barb fitting**	—	
4	**Nut**	Rolled steel (Zinc chromated)	M5 x 0.8 M6 x 1

With buffer | Flat type: ø2 to ø8 | Bellows type: ø6 to ø8 | Thin flat type/Thin flat type with ribs: ø10 to ø16

Vacuum inlet direction Vertical T Type/ZPT

ZPT□-(B3/B5)-A8

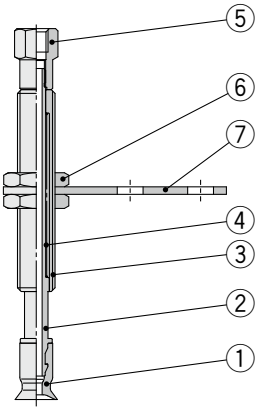

ZPT□-(04/06)-A8

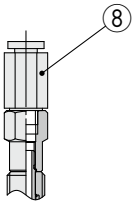

ZPT□-(N4/U4)-A8

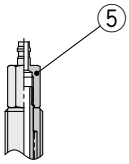

Component Parts

No.	Description	Material	Note
1	**Pad**	NBR, Silicone rubber, Urethane rubber, FKM, Conductive NBR, Conductive silicone rubber	Flat type Bellows type Thin flat type Thin flat type with ribs
2	**Piston rod**	Stainless steel	
3	**Buffer body**	Brass (Electroless nickel plating)	
4	**Return spring**	Stainless steel	
5	**Buffer adapter**	Brass (Electroless nickel plating)	
6	**Nut**	Carbon steel (Zinc chromated)	M8 x 1
7	**Buffer plate**	Steel (Trivalent chromated)	
8	**Fitting**	—	

Vacuum inlet direction Lateral R Type/ZPR

ZPR□-(04/06)-A8

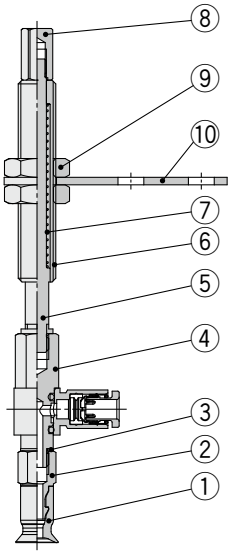

Component Parts

No.	Description	Material	Note
1	**Pad**	NBR, Silicone rubber, Urethane rubber, FKM, Conductive NBR, Conductive silicone rubber	Flat type Bellows type Thin flat type Thin flat type with ribs
2	**Adapter**	Brass (Electroless nickel plating)	
3	**Gasket**	Stainless steel 304/NBR	
4	**Adapter** (With One-touch fitting)	Brass (Electroless nickel plating), PBT, NBR, Stainless steel, POM	
5	**Piston rod**	Stainless steel	
6	**Buffer body**	Brass (Electroless nickel plating)	
7	**Return spring**	Stainless steel	
8	**Buffer adapter**	Brass (Electroless nickel plating)	
9	**Nut**	Carbon steel (Zinc chromated)	M8 x 1
10	**Buffer plate**	Steel (Trivalent chromated)	

Vacuum inlet direction Lateral Y Type/ZPY

ZPY□-(N4/N6/U4/U6)-A8

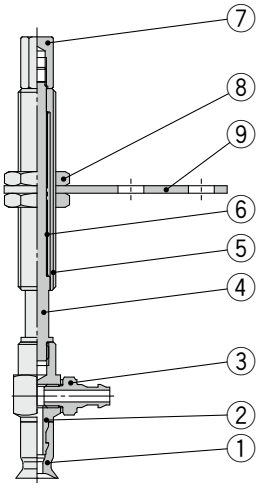

Component Parts

No.	Description	Material	Note
1	**Pad**	NBR, Silicone rubber, Urethane rubber, FKM, Conductive NBR, Conductive silicone rubber	Flat type Bellows type Thin flat type Thin flat type with ribs
2	**Adapter**	Brass (Electroless nickel plating)	
3	**Barb fitting**	—	
4	**Piston rod**	Stainless steel	
5	**Buffer body**	Brass (Electroless nickel plating)	
6	**Return spring**	Stainless steel	
7	**Buffer adapter**	Brass (Electroless nickel plating)	
8	**Nut**	Carbon steel (Zinc chromated)	M8 x 1
9	**Buffer plate**	Steel (Trivalent chromated)	

With adapter | Flat type: ø10 to ø50 | Flat type with ribs: ø10 to ø50 | Bellows type: ø10 to ø50 | Deep type: ø10 to ø40

Vacuum inlet direction Vertical T Type/ZP□T

ZP□T□-(A5/A6/A8)

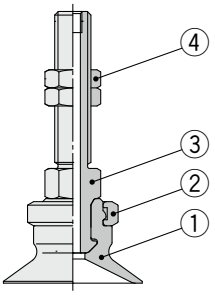

ZP□T□-(AS5/AS6)

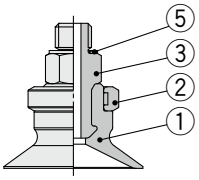

ZP□T□-(AG01/AG02)

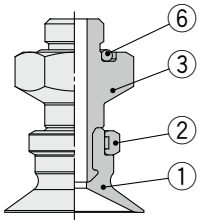

ZP□T□-(B5/B6/B8/BG01/BG02/B01/N01/T01)

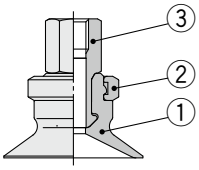

Component Parts

No.	Description	Material	Note	
1	**Pad**	NBR, Silicone rubber, Urethane rubber, FKM, Conductive NBR, Conductive silicone rubber	Flat type Flat type with ribs Bellows type Deep type	
2	**Lock ring**	Brass (Electroless nickel plating)	**ZPT**	
		Stainless steel	**ZPST**	
3	**Adapter**	Brass (Electroless nickel plating)	**ZPT**	
		Stainless steel	**ZPST**	
4	**Nut**	Rolled steel (Zinc chromated)	M5 x 0.8 M6 x 1	**ZPT**
		Carbon steel (Zinc chromated)	M8 x 1	
		Stainless steel	**ZPST**	
5	**Gasket**	Stainless steel/NBR	**ZPT**	
		Stainless steel/FKM	**ZPST**	
6	**O-ring**	Silicone rubber (Blue)		

Vacuum inlet direction Lateral R Type/ZPR

ZPR□-(04/06/08)-(A5/A6/A8)

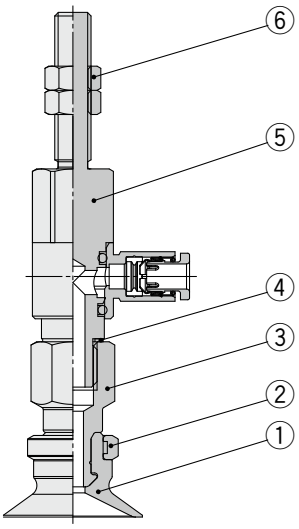

ZPR□-(04/06/08)-(B5/B6/B8)

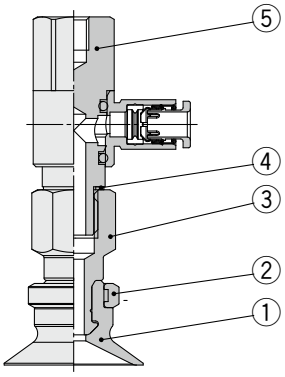

Component Parts

No.	Description	Material	Note
1	**Pad**	NBR, Silicone rubber, Urethane rubber, FKM, Conductive NBR, Conductive silicone rubber	Flat type Flat type with ribs Bellows type Deep type
2	**Lock ring**	Brass (Electroless nickel plating)	
3	**Adapter**	Brass (Electroless nickel plating)	
4	**Gasket**	Stainless steel 304/NBR	
5	**Adapter** **(With One-touch fitting)**	Brass (Electroless nickel plating), PBT, NBR, Stainless steel, POM	
6	**Nut**	Rolled steel (Zinc chromated)	M5 x 0.8 M6 x 1
		Carbon steel (Zinc chromated)	M8 x 1

Vacuum inlet direction Lateral Y Type/ZPY

ZPY□-(N4/N6/U4/U6)-(A5/A6/A8)

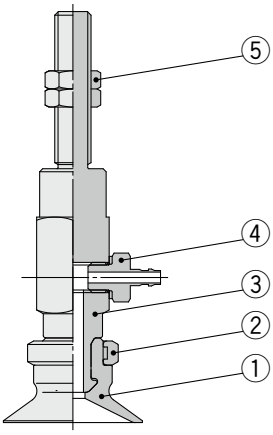

ZPY□-(N4/N6/U4/U6)-(B5/B6/B8)

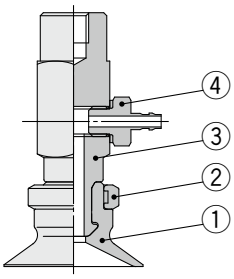

Component Parts

No.	Description	Material	Note
1	**Pad**	NBR, Silicone rubber, Urethane rubber, FKM, Conductive NBR, Conductive silicone rubber	Flat type Flat type with ribs Bellows type Deep type
2	**Lock ring**	Brass (Electroless nickel plating)	
3	**Adapter**	Brass (Electroless nickel plating)	
4	**Barb fitting**	—	
5	**Nut**	Rolled steel (Zinc chromated)	M5 x 0.8 M6 x 1
		Carbon steel (Zinc chromated)	M8 x 1

With buffer | Flat type: ø10 to ø50 | Flat type with ribs: ø10 to ø50 | Bellows type: ø10 to ø50 | Deep type: ø10 to ø40

Vacuum inlet direction Vertical T Type/ZPT

ZPT□-(B5/B01/N01/T01)-(A10/A14)

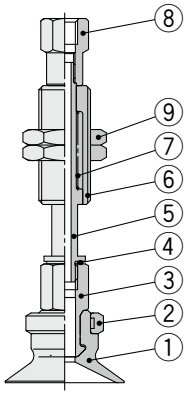

ZPT□-(04/06/08)-(A10/A14)

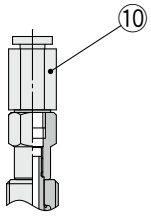

ZPT□-(N6/U6)-(A10/A14)

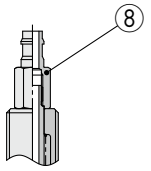

Component Parts

No.	Description	Material	Note
1	**Pad**	NBR, Silicone rubber, Urethane rubber, FKM, Conductive NBR, Conductive silicone rubber	Flat type Flat type with ribs Bellows type Deep type
2	**Lock ring**	Brass (Electroless nickel plating)	
3	**Adapter**	Brass (Electroless nickel plating)	
4	**Gasket**	Stainless steel/NBR	
5	**Piston rod**	Stainless steel	
6	**Buffer body**	Brass (Electroless nickel plating)	
7	**Return spring**	Stainless steel	
8	**Buffer adapter**	Brass (Electroless nickel plating)	
9	**Nut**	Steel (Zinc chromated)	M10 x 1 M14 x 1
10	**Fitting**	—	

Vacuum inlet direction Lateral R Type/ZPR

ZPR□-(04/06/08)-(A10/A14)

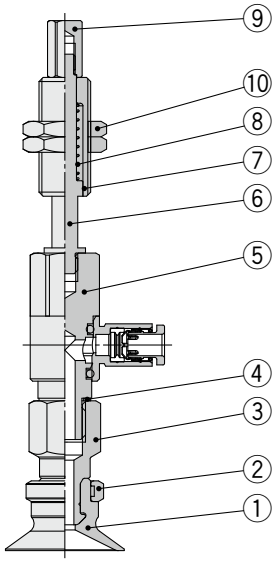

Component Parts

No.	Description	Material	Note
1	**Pad**	NBR, Silicone rubber, Urethane rubber, FKM, Conductive NBR, Conductive silicone rubber	Flat type Flat type with ribs Bellows type Deep type
2	**Lock ring**	Brass (Electroless nickel plating)	
3	**Adapter**	Brass (Electroless nickel plating)	
4	**Gasket**	Stainless steel/NBR	
5	**Adapter** (With One-touch fitting)	Brass (Electroless nickel plating), PBT, NBR, Stainless steel, POM	
6	**Piston rod**	Stainless steel	
7	**Buffer body**	Brass (Electroless nickel plating)	
8	**Return spring**	Stainless steel	
9	**Buffer adapter**	Brass (Electroless nickel plating)	
10	**Nut**	Steel (Zinc chromated)	M10 x 1 M14 x 1

Vacuum inlet direction Lateral Y Type/ZPY

ZPY□-(N4/N6/U4/U6)-(A10/A14)

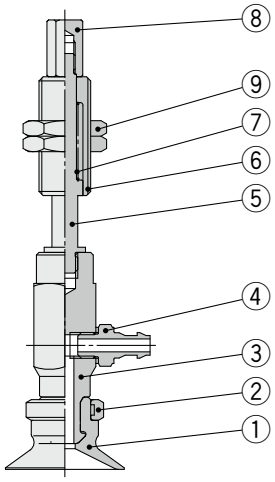

Component Parts

No.	Description	Material	Note
1	**Pad**	NBR, Silicone rubber, Urethane rubber, FKM, Conductive NBR, Conductive silicone rubber	Flat type Flat type with ribs Bellows type Deep type
2	**Lock ring**	Brass (Electroless nickel plating)	
3	**Adapter**	Brass (Electroless nickel plating)	
4	**Barb fitting**	—	
5	**Piston rod**	Stainless steel	
6	**Buffer body**	Brass (Electroless nickel plating)	
7	**Return spring**	Stainless steel	
8	**Buffer adapter**	Brass (Electroless nickel plating)	
9	**Nut**	Steel (Zinc chromated)	M10 x 1 M14 x 1

Construction

With adapter **Flat type: ø10 to ø50**

Vacuum inlet direction Vertical T Type/ZPT□F

ZPT□F□-B5-(A8/A10/A14)

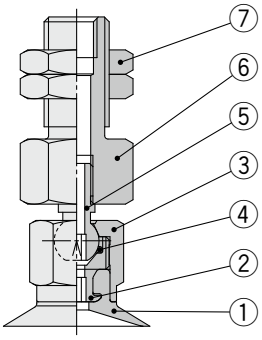

ZPT□F□-(B5/B8/B01/N01/T01)

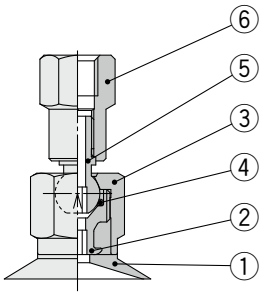

ø10 to ø32

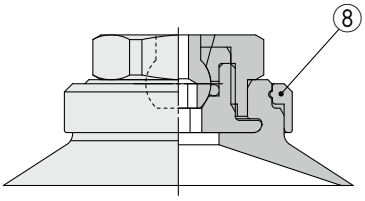

ø40, ø50

Component Parts

No.	Description	Material	Note
1	**Pad**	NBR, Silicone rubber, Urethane rubber, FKM, Conductive NBR, Conductive silicone rubber	Flat type
2	**Adapter**	Brass (Electroless nickel plating)	
3	**Shaft cover**	Stainless steel	
4	**O-ring**	FKM	
5	**Shaft**	Stainless steel	
6	**Shaft adapter**	Brass (Electroless nickel plating)	
7	**Nut**	Carbon steel (Zinc chromated)	M8 x 1
		Steel (Zinc chromated)	M10 x 1 M14 x 1
8	**Lock ring**	Aluminum (Clear anodized)	Pad diameter: ø40, ø50

Vacuum inlet direction Lateral R Type/ZPR□F

ZPR□F□-(04/06/08)-(B5/B8)

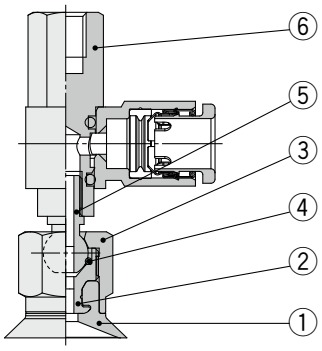

ø10 to ø32

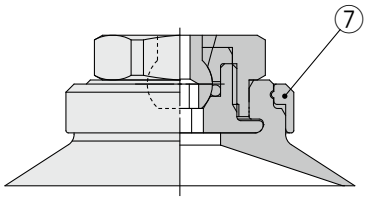

ø40, ø50

Component Parts

No.	Description	Material	Note
1	**Pad**	NBR, Silicone rubber, Urethane rubber, FKM, Conductive NBR, Conductive silicone rubber	Flat type
2	**Adapter**	Brass (Electroless nickel plating)	
3	**Shaft cover**	Stainless steel	
4	**O-ring**	FKM	
5	**Shaft**	Stainless steel	
6	**Shaft adapter** (With One-touch fitting)	Brass (Electroless nickel plating), PBT, NBR, Stainless steel, POM	
7	**Lock ring**	Aluminum (Clear anodized)	Pad diameter: ø40, ø50

With buffer Flat type: ø10 to ø50

Vacuum inlet direction Vertical T Type/ZPT□F

ZPT□F□-(B5/B01/N01/T01)-(A10/A14) **ZPT□F□-(04/06/08)-(A10/A14)**

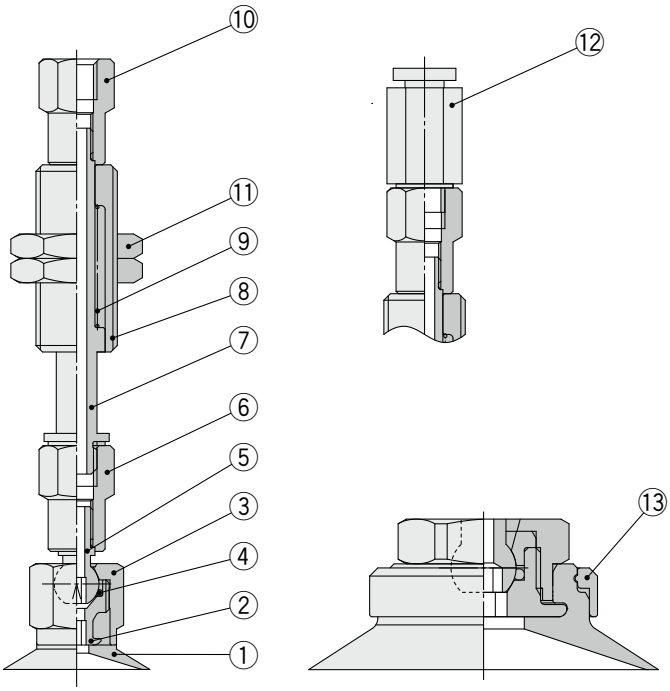

ø10 to ø32 ø40, ø50

Component Parts

No.	Description	Material	Note
1	**Pad**	NBR, Silicone rubber, Urethane rubber, FKM, Conductive NBR, Conductive silicone rubber	Flat type
2	**Adapter**	Brass (Electroless nickel plating)	
3	**Shaft cover**	Stainless steel	
4	**O-ring**	FKM	
5	**Shaft**	Stainless steel	
6	**Shaft adapter**	Brass (Electroless nickel plating)	
7	**Piston rod**	Stainless steel	
8	**Buffer body**	Brass (Electroless nickel plating)	
9	**Return spring**	Stainless steel	
10	**Buffer adapter**	Brass (Electroless nickel plating)	
11	**Nut**	Steel (Zinc chromated)	M10 x 1 M14 x 1
12	**Fitting**	—	
13	**Lock ring**	Aluminum (Clear anodized)	Pad diameter: ø40, ø50

Vacuum inlet direction Lateral R Type/ZPR□F

ZPR□F□-(04/06/08)-(A10/A14)

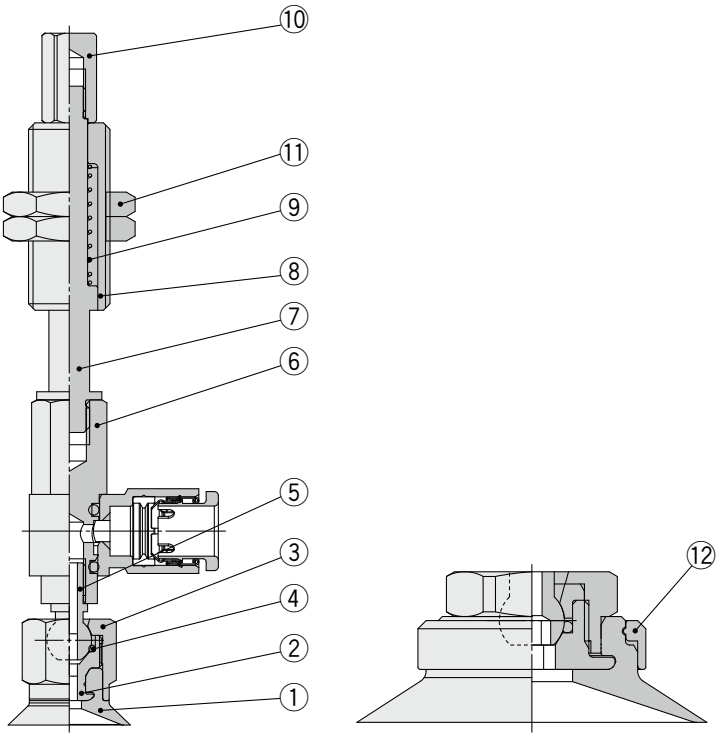

ø10 to ø32 ø40, ø50

Component Parts

No.	Description	Material	Note
1	**Pad**	NBR, Silicone rubber, Urethane rubber, FKM, Conductive NBR, Conductive silicone rubber	Flat type
2	**Adapter**	Brass (Electroless nickel plating)	
3	**Shaft cover**	Stainless steel	
4	**O-ring**	FKM	
5	**Shaft**	Stainless steel	
6	**Shaft adapter** (With One-touch fitting)	Brass (Electroless nickel plating), PBT, NBR, Stainless steel, POM	
7	**Piston rod**	Stainless steel	
8	**Buffer body**	Brass (Electroless nickel plating)	
9	**Return spring**	Stainless steel	
10	**Buffer adapter**	Brass (Electroless nickel plating)	
11	**Nut**	Steel (Zinc chromated)	M10 x 1 M14 x 1
12	**Lock ring**	Aluminum (Clear anodized)	Pad diameter: ø40, ø50

Basic/Compact Type Specific Product Precautions

Be sure to read this before handling the products.
For safety instructions, refer to the "Handling Precautions for SMC Products" and the "Operation Manual" on the SMC website: https://www.smcworld.com

Mounting

1. Tighten the screw within the specified torque range when mounting the buffer.

Tightening with a torque outside of the specified range may cause malfunction.

Basic Type ZP Series

Product part number	Connection thread	Tightening torque [N·m]
ZP□(2 to 8)□(J/K)□-□-A8	M8 x 1	1.5 to 2.0
ZP□(10 to 32)□(J/K)□-□-A10	M10 x 1	2.5 to 3.5
ZP□(40/50)□(J/K)□-□-A14	M14 x 1	6.5 to 7.5

Compact Type ZP3 Series

Product part number	Connection thread	Tightening torque [N·m]
ZP3□-□(015 to 035)□J□-□	M6 x 0.75	1.5 to 1.8
ZP3□-□(015 to 035)□K□-□	M8 x 0.75	2.0 to 2.5
ZP3□-□(04 to 16)□(J/JB/K)□-□		

2. When mounting the product, tighten with the tightening torque shown in the table below.
If excessive or insufficient tightening torque is applied, sealing failure or loose screws may result.

Basic Type ZP Series

Product part number	Connection thread	Tightening torque [N·m]
ZP□T□□-A5	M5 x 0.8	1.3 to 1.7
ZP□T□□-AS5		
ZP□T□□-A6	M6 x 1	1.6 to 2
ZP□T□□-AS6		
ZP□T□□-AG01	G1/8	3 to 5
ZP□T□□-AG02	G1/4	8 to 12

Compact Type ZP3 Series

Product part number	Connection thread	Tightening torque [N·m]
ZP3□-T(015 to 035)U□-A3	M3 x 0.5	0.2 to 0.25
ZP3□-T(04 to 16)□□-A5	M5 x 0.8	1.3 to 1.7

Product part number	Connection thread	Tightening torque [N·m]
ZP□T□□-BG01	G1/8	3 to 5
ZP□T□□-BG02	G1/4	8 to 12

How to Replace the Pad

1. How to replace the pad of the basic type ZP series

1 Pull the lock ring upward, and, after lifting it up to the adapter, remove the old pad by pulling it downward.

2 While holding the lock ring in the raised position, place a new pad onto the adapter.

3 Confirm that the pad is securely in place, and then return the lock ring to its original position.

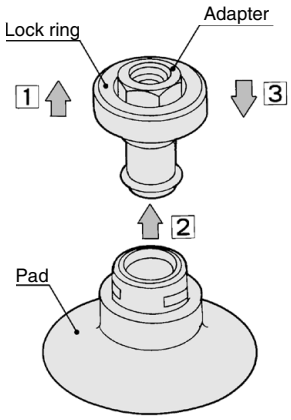

2. How to replace the pad of the basic (ball joint) type ZP series

Pad diameter: ø10 to ø32

1 Insert a hexagon wrench into the bottom of the pad, loosen the screw, and remove the old pad from the adapter.

2 Place a new pad on the adapter, and, after confirming that the O-ring is in place, retighten the screw with the hexagon wrench.

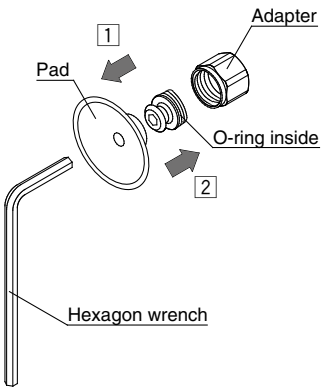

Pad diameter: ø40, ø50

1 Pull the lock ring upward, and, after lifting it up to the adapter, remove the old pad by pulling it downward.

2 While holding the lock ring in the raised position, place a new pad onto the adapter.
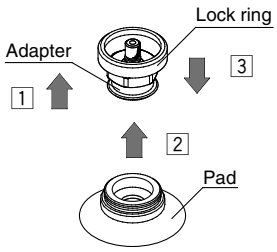
3 Confirm that the pad is securely in place, and then return the lock ring to its original position.